NAVAL SHIPS' TECHNICAL MANUAL

CHAPTER 635

THERMAL, FIRE, AND ACOUSTIC INSULATION

THIS CHAPTER SUPERSEDES CHAPTER 635 DATED MAY 1986

DISTRIBUTION STATEMENT C: DISTRIBUTION AUTHORIZED TO U.S. GOVERNMENT AGENCIES AND THEIR CONTRACTORS; ADMINISTRATIVE AND OPERATIONAL USE (15 APRIL 1976). OTHER REQUESTS FOR THIS DOCUMENT WILL BE REFERRED TO THE NAVAL SEA SYSTEMS COMMAND (SEA-56Z11).

DESTRUCTION NOTICE: DESTROY BY ANY METHOD THAT WILL PREVENT DISCLOSURE OF CONTENTS OR RECONSTRUCTION OF THE DOCUMENT.

PUBLISHED BY DIRECTION OF COMMANDER, NAVAL SEA SYSTEMS COMMAND.

28 JUL 1998

NAVSEA TECHNICAL MANUAL CERTIFICATION SHEET 1 of 1

Certification Applies to: New Manual ☐ Revision ☒ Change ☐

Applicable TMINS/Pub. No. S9086–VH–STM–010/CH–635R2

Publication Date (Mo, Da, Yr) July 28, 1998

Title: NSTM Chapter 635, Thermal, Fire, and Acoustic Insulation

TMCR/TMSR/Specification No:

CHANGES AND REVISIONS:

Purpose: Bars in the outside margins indicate changes since the last revision.

Equipment Alteration Numbers Incorporated:

TMDER/ACN Numbers Incorporated:

Continue on reverse side or add pages as needed.

CERTIFICATION STATEMENT

This is to certify that responsible NAVSEA activities have reviewed the above identified document for acquisition compliance, technical coverage, and printing quality. This form is for internal NAVSEA management use only, and does not imply contractual approval or acceptance of the technical manual by the Government, nor relieve the contractor of any responsibility for delivering the technical manual in accordance with the contract requirement.

Authority	Name	Signature	Organization	Code	Date
Acquisition					
Technical	R. Dempsey	R L Dempsey	Naval Sea Systems Command	SEA 03M3	7/28/98
Printing Release	Digital Media Publishing				

TABLE OF CONTENTS

Chapter/Paragraph — Page

635 THERMAL, FIRE, AND ACOUSTIC INSULATION 635-1

SECTION 1. GENERAL 635-1

635-1.1 PURPOSE OF INSULATION 635-1
635-1.1.1 THERMAL INSULATION. 635-1
635-1.1.2 ACOUSTIC INSULATION. 635-1
635-1.1.3 FIRE INSULATION. 635-1
635-1.1.4 DEFINITION OF TERMS. 635-2
635-1.1.4.1 Blanket Insulation. 635-2
635-1.1.4.2 Block Insulation. 635-2
635-1.1.4.3 Board Insulation. 635-2
635-1.1.4.4 Coating. 635-2
635-1.1.4.5 Conduction. 635-2
635-1.1.4.6 Thermal Conductivity. 635-2
635-1.1.4.7 Convection. 635-2
635-1.1.4.8 Radiation. 635-2
635-1.1.4.9 Surface Emissivity. 635-2
635-1.1.4.10 High Temperature Insulation Cement. 635-3
635-1.1.4.11 Finishing Cement. 635-3
635-1.1.4.12 Lagging. 635-3

635-1.2 HEALTH AND SAFETY PRECAUTIONS 635-3

SECTION 2. THERMAL INSULATION FOR PIPING 635-3

635-2.1 MATERIALS 635-3
635-2.1.1 INSULATION. 635-3
635-2.1.2 INSULATION CHARACTERISTICS. 635-3
635-2.1.3 INSULATING FORMS. 635-4

635-2.2 PREFORMED PIPE COVERING 635-5
635-2.2.1 THERMAL INSULATION PIPE COVERING. 635-5
635-2.2.2 ANTI-SWEAT INSULATION. 635-5
635-2.2.3 ELASTOMERIC FOAM PLASTIC. 635-5
635-2.2.4 PREFORMED FIBROUS GLASS PIPE COVERING. 635-5
635-2.2.5 PREFORMED POLYIMIDE FOAM INSULATION FOR HOT PIPING, DOD-I-24688, TYPE I, WITHOUT A VAPOR BARRIER. 635-5
635-2.2.6 THERMAL INSULATION BLOCK. 635-6

635-2.3 BLANKETS, SHEETS AND FELTS 635-6
635-2.3.1 THERMAL GLASS FIBER INSULATION FELT. 635-6
635-2.3.2 REFRACTORY FIBER THERMAL INSULATION BLANKET. 635-6
635-2.3.3 FIBROUS MINERAL WOOL THERMAL INSULATION BLANKETS. . . 635-6
635-2.3.4 THERMAL INSULATING TAPE (FOR TEMPORARY REPAIR). 635-6
635-2.3.5 SHEET FORM INSULATION. 635-7

TABLE OF CONTENTS - Continued

Chapter/Paragraph Page

635-2.4 CEMENTS 635-7
635-2.4.1 HIGH TEMPERATURE INSULATING CEMENT. 635-7
635-2.4.2 FINISHING AND INSULATING CEMENT. 635-7
635-2.4.3 LAGGING. 635-7
635-2.4.3.1 Lagging Systems Materials. 635-7
635-2.4.3.2 Fibrous Glass Cloth and Tape. 635-8
635-2.4.3.3 Fibrous Glass Metallic Cloth and Tape. 635-8
635-2.4.3.4 Metallic Lagging. 635-8
635-2.4.4 SILICONE RUBBER COATED/ALUMINIZED AND SILICONE RUBBER COATED FIBROUS GLASS CLOTHS. 635-8
635-2.4.5 ADHESIVE. 635-8

635-2.5 COATINGS 635-9
635-2.5.1 COATING. 635-9
635-2.5.2 FIRE-RESISTANT VAPOR-BARRIER COATING. 635-9
635-2.5.3 END-SEALING COMPOUND. 635-9
635-2.5.4 PAINT. 635-9

635-2.6 INSTALLATION OF PIPING INSULATION 635-9
635-2.6.1 REQUIREMENTS FOR THERMAL INSULATION. 635-9
635-2.6.2 PREPARATION. 635-10
635-2.6.3 TREATMENT OF UNINSULATED PIPING. 635-10
635-2.6.4 EXCEPTIONS TO INSULATION REQUIREMENTS. 635-10
635-2.6.5 UNSPECIFIED SURFACES. 635-10
635-2.6.6 CLOTH LAGGING SECURED WITH ADHESIVE. 635-10
635-2.6.7 SECTIONAL PREFORMED INSULATION APPLICATION. 635-11
635-2.6.8 METAL LAGGING INSTALLATION. 635-11

635-2.7 MAINTENANCE OF THERMAL INSULATION 635-11
635-2.7.1 SCHEDULED MAINTENANCE. 635-11

635-2.8 INSPECTION OF THERMAL INSULATION 635-11
635-2.8.1 VISUAL INSPECTIONS. 635-11
635-2.8.2 BROKEN OR LOOSE INSULATION. 635-11
635-2.8.3 WATER DAMAGE. 635-12
635-2.8.4 HEAT LOSS DETECTION. 635-12
635-2.8.5 HEAT GUN. 635-12
635-2.8.6 HEAT GUN OPERATION. 635-12
635-2.8.7 HEAT GUN STORAGE. 635-13
635-2.8.8 HEAT GUN CHECKS. 635-13

635-2.9 CORRECTIVE ACTION 635-13
635-2.9.1 GENERAL. 635-13

635-2.10 THERMAL INSULATION TO PIPE OR TUBING APPLICATION 635-14
635-2.10.1 HOT PIPING SYSTEMS (125°F TO 1,050°F), EXCEPT WEATHER DECK PIPING. 635-14

TABLE OF CONTENTS - Continued

Chapter/Paragraph Page

635-2.10.2 PREFORMED SECTIONAL PIPE COVERINGS. 635-14
635-2.10.3 FIBROUS GLASS PREFORMED SECTIONAL INSULATION. 635-16
635-2.10.4 POLYIMIDE FOAM INSULATION. 635-16
635-2.10.5 THERMAL INSULATION TAPE. 635-17
635-2.10.6 PIPE HANGERS. 635-18
635-2.10.7 COVERS. 635-20
635-2.10.8 STEAM TRAPS. 635-23
635-2.10.9 INTERMITTENT USE BOILER PIPING SYSTEMS. 635-23
635-2.10.10 WEATHER DECK HOT PIPING. 635-24
635-2.10.11 DIESEL EXHAUST INSULATION. 635-25
635-2.10.12 ANTI-SWEAT SYSTEMS (28°F to 99°F). 635-25
635-2.10.13 REFRIGERANT INSULATION (-20°F to + 40°F). 635-28

SECTION 3. THERMAL AND ACOUSTIC INSULATION FOR MACHINERY 635-29

635-3.1 MATERIALS 635-29
635-3.1.1 INSULATION. 635-29
635-3.1.2 LAGGING. 635-29
635-3.1.3 ADHESIVE. 635-30
635-3.1.4 ADDITIONAL APPLICATIONS. 635-30
635-3.1.5 FINISH, COATING, SECUREMENT, AND REINFORCEMENT MATERIALS. 635-30

635-3.2 INSULATION INSTALLATION REQUIREMENTS 635-30
635-3.2.1 PREPARATION. 635-30
635-3.2.2 GENERAL REQUIREMENTS. 635-31
635-3.2.3 EQUIPMENT SUPPORTS. 635-31
635-3.2.4 INSPECTION AND MAINTENANCE. 635-31

635-3.3 INSTALLATION OF THERMAL INSULATION FOR MACHINERY 635-31
635-3.3.1 THERMAL INSULATION TO TURBINES APPLICATION 635-31
635-3.3.1.1 Permanent Insulation Application. 635-31
635-3.3.1.2 Removable Turbine Casing Flange Joint Cover. 635-34
635-3.3.1.3 Semi-Removable Turbine Flange Cover. 635-34

635-3.4 INSTALLATION OF THERMAL INSULATION TO BOILER COMPONENTS APPLICATION 635-34
635-3.4.1 BOILER CASINGS 635-34
635-3.4.2 Boiler Steam Drums and Water Drums. 635-37
635-3.4.3 Drum Ends. 635-37
635-3.4.4 MANHOLE COVERS. 635-37
635-3.4.5 SUPERHEATER HEADERS. 635-38
635-3.4.6 BOILER UPTAKE AND BREECHING. 635-38

635-3.5 THERMAL INSULATION TO LOW PRESSURE DISTILLING PLANT APPLICATION 635-38
635-3.5.1 HOT COMPONENTS. 635-38

TABLE OF CONTENTS - Continued

Chapter/Paragraph Page

635-3.5.2 REMOVABLE COVERS. 635-39
635-3.5.3 DISTILLATE COOLER AND STAGE CONDENSERS. 635-39

635-3.6 THERMAL INSULATION TO AUXILIARY MACHINERY, PUMPS, AND EQUIPMENT WITH TEMPERATURES ABOVE 125°F APPLICATION 635-39
635-3.6.1 PERMANENT INSULATION. 635-39
635-3.6.2 REUSABLE INSULATION. 635-39

635-3.7 THERMAL INSULATION TO UNFIRED PRESSURE VESSELS APPLICATION . 635-39
635-3.7.1 PERMANENT INSULATION. 635-39
635-3.7.2 REUSABLE COVERS. 635-39
635-3.7.3 GAS TURBINE EXHAUST DUCT INSULATION. 635-40

635-3.8 COLD WATER ANTI-SWEAT INSULATION (28°F TO 99°F) 635-40
635-3.8.1 INSULATION APPLICATION. 635-40
635-3.8.2 REFRIGERANT INSULATION (-20°F TO 40°F). 635-41
635-3.8.3 O_2 N_2 PLANT. 635-41

SECTION 4. REFRIGERATED STORES SPACES 635-42

635-4.1 GENERAL 635-42
635-4.1.1 APPLICATIONS. 635-42
635-4.1.2 MATERIALS. 635-42
635-4.1.3 INSULATION. 635-42
635-4.1.3.1 Sheathing (Inner Lining). 635-43
635-4.1.4 DECK COVERING. 635-43
635-4.1.5 FURRING AND FRAMING. 635-43

635-4.2 INSTALLATION 635-43
635-4.2.1 GENERAL INSTALLATION TECHNIQUES. 635-43
635-4.2.2 BREATHER OPENINGS. 635-44
635-4.2.3 REFRIGERATED SPACE DOORS. 635-45

635-4.3 MAINTENANCE, INSPECTION, AND REPAIR 635-46
635-4.3.1 MAINTENANCE, TESTS, CHECKS, AND INSPECTION. 635-46
635-4.3.2 REPAIR. 635-46

SECTION 5. THERMAL INSULATION FOR COMPARTMENTS 635-47

635-5.1 GENERAL 635-47
635-5.1.1 APPLICATIONS. 635-47
635-5.1.2 THICKNESSES OF INSULATION. 635-47
635-5.1.3 MATERIALS. 635-48
635-5.1.4 INSTALLATION. 635-49

635-5.2 SURFACE SHIPS 635-49
635-5.2.1 GENERAL 635-49

TABLE OF CONTENTS - Continued

Chapter/Paragraph Page

635-5.2.2 SUBMARINES. 635-50
635-5.2.3 MAINTENANCE. 635-51
635-5.2.4 REPAIR. 635-51
635-5.2.5 SURFACE SHIPS. 635-51
635-5.2.6 SUBMARINES. 635-51

635-5.3 ANTI-SWEAT TREATMENT 635-52
635-5.3.1 MATERIALS. 635-52
635-5.3.2 APPLICATIONS. 635-52

SECTION 6. THERMAL INSULATION FOR DUCTS 635-52

635-6.1 GENERAL 635-52
635-6.1.1 APPLICATIONS. 635-52
635-6.1.2 MATERIALS. 635-53
635-6.1.3 INSTALLATION. 635-53
635-6.1.4 MAINTENANCE. 635-54
635-6.1.5 REPAIR. 635-54

SECTION 7. ACOUSTIC ABSORPTION TREATMENT AND TRANSMISSION LOSS TREATMENTS FOR COMPARTMENTS 635-55

635-7.1 GENERAL 635-55
635-7.1.1 APPLICATIONS. 635-55
635-7.1.2 MATERIALS. 635-55

635-7.2 INSTALLATION 635-56
635-7.2.1 GENERAL INSTALLATION PROCEDURES 635-56
635-7.2.2 TREATMENTS INSTALLED FOR ACOUSTIC ABSORPTION PURPOSES 635-57
635-7.2.3 TREATMENTS INSTALLED FOR TRANSMISSION LOSS PURPOSES. . 635-58
635-7.2.4 ACOUSTIC TREATMENT MAINTENANCE. 635-59
635-7.2.5 INSPECTION. 635-62

SECTION 8. ACOUSTIC LINING AND LAGGING TREATMENTS FOR DUCTS 635-62

635-8.1 ACOUSTIC LINING FOR DUCTS 635-62
635-8.1.1 APPLICATIONS. 635-62
635-8.1.2 MATERIALS. 635-63
635-8.1.3 INSTALLATION. 635-63
635-8.1.4 INSPECTION. 635-66

635-8.2 ACOUSTIC LAGGING TREATMENT FOR DUCTS 635-66
635-8.2.1 APPLICATIONS. 635-66
635-8.2.2 MATERIALS. 635-67
635-8.2.3 INSTALLATION. 635-68
635-8.2.4 INSPECTION. 635-68

TABLE OF CONTENTS - Continued

Chapter/Paragraph Page

SECTION 9. FIRE INSULATION FOR COMPARTMENTS 635-69

635-9.1 GENERAL 635-69
635-9.1.1 SCOPE. 635-69
635-9.1.2 MATERIALS. 635-69
635-9.1.3 INSTALLATION. 635-70
635-9.1.3.1 Fire Insulation. 635-70
635-9.1.3.2 Butts and Seams. 635-70
635-9.1.3.3 Beams and Stiffeners. 635-70
635-9.1.3.4 Penetration Sleeves. 635-70
635-9.1.3.5 Protective Coaming. 635-70
635-9.1.3.6 Beam and Stiffener Installation. 635-71
635-9.1.3.7 Vertical Stiffeners. 635-71
635-9.1.3.8 Pipe Stanchions. 635-71
635-9.1.4 INSPECTION AND REPAIR. 635-72
635-9.1.5 OIL, WATER, OR VAPOR PROTECTION. 635-72
635-9.1.6 DOORS AND HATCHES. 635-74
635-9.1.7 BULKHEAD PENETRATIONS. 635-74
635-9.1.8 LADDERS AND SUPPORTS. 635-74
635-9.1.9 TREATMENT OVER BALLISTIC OR FRAGMENTATION PROTECTIVE PANELS. 635-74

SECTION 10. EMERGENCY REPAIR OF ASBESTOS-CONTAINING LAGGING 635-79

635-10.1 GENERAL 635-79
635-10.1.1 PERSONAL PROTECTIVE EQUIPMENT (PPE) 635-80

635-10.2 PROCEDURES 635-80
635-10.2.1 DISPOSAL. 635-81
635-10.2.2 MEDICAL SURVEILLANCE. 635-81
635-10.2.3 TRAINING. 635-81
635-10.2.4 CONFLICTS. 635-81

A. NON-ASBESTOS NATIONAL STOCK NUMBERS AND RELATED ITEM DESCRIPTIONS FOR SELECTED THERMAL INSULATION SPECIFICATIONS A-1

635-A.1 NATIONAL STOCK NUMBERS (NSN'S) A-1

635-A.2 REFERENCE DOCUMENTS A-1

635-A.3 APPLICATION: PIPE INSULATION A-2

635-A.4 APPLICATION: BOARDS, BLANKETS, BLOCKS, AND FELTS A-4

635-A.5 APPLICATION: LAGGING A-6

TABLE OF CONTENTS - Continued

Chapter/Paragraph Page

635-A.6 APPLICATION: INSULATION ADHESIVE A-7

635-A.7 APPLICATION: INSULATION CEMENT A-7

LIST OF TABLES

Table	Title	Page
635-1-1	REPRESENTATIVE THERMAL CONDUCTIVITY	635-1
635-2-1	HEAT GUN SPECIFICATIONS	635-12
635-2-2	THICKNESS OF INSULATION FOR HOT PIPING CONFORMING TO MIL-I-2781	635-14
635-2-3	THICKNESS OF INSULATION CONFORMING TO DOD-I-24688, TYPE I, ELECTRIC BOAT CORPORATION SPECIFICATION 4013 AND MIL-I-22344[1/2], FOR HOT PIPING	635-16
635-2-4	THICKNESS OF INSULATION TAPE CONFORMING TO MIL-I-20079 AND MIL-I16441 FOR 1/4-TO 3/4-INCH SIZE HOT PIPING[1/2]	635-17
635-2-5	THICKNESS OF INSULATING MATERIALS FOR HOT SURFACES OF VALVES AND FITTING UP TO 1,200°F [1]	635-19
635-2-6	NOMINAL THICKNESS OF INSULATION FOR WEATHER DECK HOT PIPING	635-24
635-2-7	THICKNESS OF ANTI-SWEAT INSULATION ELECTRIC BOAT CORPORATION SPECIFICATION 4013 FOR PIPING (NOMINAL THICKNESS (INCHES))	635-28
635-3-1	THICKNESS OF INSULATION MATERIALS FOR HOT SURFACES OF MACHINERY AND EQUIPMENT (NOMINAL THICKNESS (INCHES) (DOES NOT INCLUDE FINISHING CEMENT))	635-32
635-3-2	THICKNESS OF ANTISWEAT INSULATION MATERIALS FOR MACHINERY AND EQUIPMENT (NOMINAL THICKNESS (INCHES) (DOES NOT INCLUDE VAPOR BARRIER))	635-32
635-3-3	THICKNESS OF REFRIGERANT INSULATION FOR MACHINERY AND EQUIPMENT (NOMINAL THICKNESS (INCHES))	635-32
635-4-1	FURRING AND FRAMING MATERIALS	635-43
635-A-1	MIL-I-2781 INSULATION, PIPE, THERMAL (CALCIUM SILICATE) NOMINAL DENSITY (APPROXIMATELY 14 LBS/FT^3) NOMINAL LENGTH-36 INCHES SINGLE LAYER	A-2
635-A-2	MIL-I-22344 INSULATION, PIPE, THERMAL, FIBROUS GLASS NOMINAL LENGTH-36 INCHES TEMPERATURE LIMIT-370°F MAXIMUM	A-3
635-A-3	DOD-I-24688, TYPE I, POLYIMIDE PIPE INSULATION NOMINAL LENGTH-48 INCHES	A-3
635-A-4	MIL-I2818, INSULATION BLANKET, THERMAL, FIBROUS MATERIAL (MINERAL WOOL) NOMINAL WIDTH-24 INCHES DENSITY - APPROXIMATELY 12 LBS/FT^3	A-4
635-A-5	MIL-I-2819 INSULATION BLOCK, THERMAL (CALCIUM SILICATE) NOMINAL LENGTH-36 INCHES DENSITY: CLASS 2-APPROXIMATELY 14	

LIST OF TABLES - Continued

Table	Title	Page
	LBS/FT^3 CLASS 3-APPROXIMATELY 22 LBS/FT^3	A-4
635-A-6	MIL-I-16411 INSULATION, FELT, THERMAL, GLASS FIBER TEMPERATURE LIMIT-1200°F MAXIMUM	A-4
635-A-7	MIL-I-22023 INSULATION, FELT, THERMAL AND SOUND ABSORBING FELT, FIBROUS GLASS, FLEXIBLE	A-5
635-A-8	MIL-I-742 INSULATION BOARD, THRMAL, FIBROUS GLASS (TYPE I)	A-5
635-A-9	DOD-I-24688, TYPE II, CLASS 1, POLYIMIDE FOAM, THERMAL INSULATION PANEL WITH FIBROUS GLASS CLOTH FACING	A-5
635-A-10	DOD-I-24688, TYPE II, CLASS 2, POLYIMIDE FOAM, ACOUSTIC INSULATION PANEL, SLOTTED BASE BOARD, FACED WITH PERFORATED FIBROUS GLASS CLOTH	A-5
635-A-11	HH-P-31 PACKING AND LAGGING MATERIAL, FIBROUS GLASS, METALLIC AND PLAIN CLOTH AND TAPE (TYPE I, CLASS 1)	A-6
635-A-12	MIL-C-20079 CLOTH, GLASS, TAPE, TEXTILE, GLASS AND THREAD GLASS (TYPE I - GLASS CLOTH) NOMINAL LENGTH-50 YARDS NOMINAL WIDTH-60 INCHES	A-6
635-A-13	MIL-C-20079 CLOTH, GLASS, TAPE, TEXTILE, GLASS AND THREAD, GLASS (TYPE II-GLASS TAPE)	A-6
	ASTM F 1138 SPRAY SHIELDS FOR MECHANICAL JOINTS SILICONE ALUMINIZED CLOTH	A-7
635-A-15	MIL-A-3316 ADHESIVES, FIRE RESISTANT THERMAL INSULATION	A-7
635-A-16	MIL-C-2861 CEMENT, INSULATION, HIGH TEMPERATURE DENSITY-APPROXIMATELY 30 LB/FT^3	A-7

LIST OF ILLUSTRATIONS

Figure	Title	Page
635-2-1.	Double Layer Calcium Silicate Insulation	635-15
635-2-2.	Typical Installation of Calcium Silicate Pipe Insulation on Hot Piping	635-16
635-2-3.	Thermal Insulation Tape	635-18
635-2-4.	Typical Lateral Wrapped Insulation Tape Application	635-18
635-2-5.	Typical Removable Flange Cover for System Operating at Temperatures Above 450° F	635-20
635-2-6.	Removable Covers Where Flange Diameter Is Smaller Than the Outside Diameter of the Adjacent Pipe Covering	635-22
635-2-7.	Permanent Insulation of Fitting on Hot Piping System Using Insulation Felt	635-24
635-2-8.	Antisweat Piping Insulation Penetrating Bulkheads	635-27
635-2-9.	Typical Method of Insulating Cold Water Valve with Preformed Sectional Pipe Covering	635-28
635-3-1.	Application of Thermal Insulation Block, MIL-I-2819, Class 2, to Machinery and Equipment (Temperature Range 125°F to 1,200°F)	635-33
635-3-2.	Application of High Temperature Cement, MIL-C-2861, to Machinery and Equipment (Temperature Range 125° F to 850° F)	635-33
635-3-3.	Application of Fibrous Glass Felt, MIL-I-16411, to Machinery and Equipment (Temperature Range 125° F to 1,200° F)	635-35
635-3-4.	Application of Fibrous Mineral Blanket, MIL-I-2818, to Machinery or Equipment (Temperature Range 125°F to 1,000°F	635-36
635-3-5.	Turbine Casing Removable Flange Cover	635-36
635-3-6.	Typical Drum Shell Insulation	635-37
635-3-7.	Drum Shell Manhole Plate and Removable Cover	635-38
635-3-8.	Application of Insulation Felt, MIL-I-22023, to Machinery and Equipment (Temperature Range 28°F to 99°F)	635-41
635-3-9.	Typical Installation of Anti-Sweat Insulation EBCorp Spec. 4013, on Machinery and Equipment (Temperature Range -20° to 180°F)	635-42
635-5-1.	Installation of Fibrous Glass Thermal Insulation on Beams and Stiffeners	635-49
635-7-1.	Treatment Over Unconstrained and Constrained Damping Tile	635-57
635-7-2.	Transmission Loss Treatment Butted to Thermal or Acoustic Absorption Treatment	635-60
635-7-3.	Typical Transmission Loss Treatments	635-61

LIST OF ILLUSTRATIONS - Continued

Figure	Title	Page
635-7-4.	Typical Submarine Transmission Loss Treatments	635-62
635-8-1.	Typical Acoustical Treatment for Round and Square Ducts	635-64
635-8-2.	Typical Flange Connection	635-65
635-8-3.	Treatment Between Insulated Flanges, Acoustic-To-Thermal Insulation (Bottom), Acoustic-To-Acoustic Insulation (Top)	635-65
635-8-4.	Insulation Fairing Detail for Partial Treatment of Duct	635-66
635-8-5.	Typical Installation Around Bolted Access Cover	635-67
635-8-6.	Double-Wall Transmission Loss Treatment	635-68
635-8-7.	Barium-Sulfate-Loaded Vinyl or Silicone Lagged Transmission Loss Treatment	635-69
635-9-1.	Insulation Beam Wrap	635-71
635-9-2.	Penetration Sleeve	635-71
635-9-3.	Installation of Fire Insulation on Vertical Stiffeners Under Transverse Web Frames and on Transverse Bulkheads	635-73
635-9-4.	Sheathing Around Beam	635-74
635-9-5.	Treatment Around Doors and Hatches	635-75
635-9-6.	Fire Insulation Treatment Around Pipe or Vent Penetrations	635-76
635-9-7.	Fire Insulation Around Bulkhead Penetrations	635-77
635-9-8.	Light or Electrical Equipment Attachment to Stiffener (Fire Insulation Removed for Clarity)	635-78
635-9-9.	Multi-Layer Installation of Aramid Fiber Panels Between Stiffeners (Fire Insulation Removed for Clarity)	635-78
635-9-10.	Installation of Restraining Strap and Fire Insulation Studs Over Layered Rigid Aramid Fiber Panels	635-79
635-9-11.	Typical Installtion of Aramid Fiber Panel Restraining Strap Showing Fire Insulation Stud Arrangement on Bulkhead with Vertical Stiffeners (Fire Insulation Removed for Clarity)	635-79

CHAPTER 635

THERMAL, FIRE, AND ACOUSTIC INSULATION

SECTION 1.
GENERAL

635-1.1 PURPOSE OF INSULATION

635-1.1.1 THERMAL INSULATION. Thermal insulation is applied to minimize the transfer of heat from, or to, a body or surface that is hotter or colder respectively than the surrounding atmosphere. This thermal insulation is a material or materials having a low thermal conductivity. See Table 635-1-1 for representative values of thermal conductivity. While increasing the economy of a machinery plant, thermal insulation also reduces the quantity of air necessary for ventilating and cooling requirements and prevents injury of personnel due to burns from contact with hot parts of apparatus. It also ensures more uniform heat distribution within equipment. Another function of thermal insulation is to prevent sweating of cold surfaces where atmospheric moisture condenses, causing undesirable dripping and accelerated corrosion of the metal. Insulation shall be sufficiently effective to reduce heat losses and lower surface temperatures to 125°F for fluid temperatures up to 650°F with an ambient temperature 85°F. For fluid temperatures above 650°F, the surface temperature shall be maintained at a maximum of 133°F.

Table 635-1-1 REPRESENTATIVE THERMAL CONDUCTIVITY

Material	Mean Temp. (°F)	k
Air	50	0.168
Concrete	60	3.24
Rubber (Soft)	60	1.20
Wood	60	0.84
Fibrous glass	75	0.23
Polyimide foam	75	0.32
Calcium silicate	200	0.42
Rockwool	90	0.276
Aluminum	100	1464.0
Copper	100	2640.0
Steel	100	300.0
Water	100	3.5
Polyphosphazene	75	0.30

635-1.1.2 ACOUSTIC INSULATION. Acoustic insulating materials reduce airborne noise levels aboard ships for hearing conservation and personnel comfort.

635-1.1.3 FIRE INSULATION. When installed over magazines, pyrotechnic lockers or aluminum structure, fire insulation reduces the risk of serious damage due to fire. Fire insulation is installed to retard heat transfer to underlying substrate materials (thereby maintaining structural integrity), and to prevent heat transfer to other compartments to limit the spread of fire. Fire insulation is used to protect fire zone bulkheads and boundaries from selected hazards. When exposed to a standard fire, the insulation will keep the far side temperatures less than 450°F for a period of 30 minutes. The majority of fleet installations use mineral wool that is qualified to fire test ASTM E 119. Newer fire insulations such as amorphous glass (silica fiber) are qualified to Underwriters

Laboratory UL 1709. Mineral wool fire insulation is installed in ship Classes such as DDG-51, MHC-51, LHD-1, LSD 49 (CV) and CG-47. Amorphous glass fire insulation is specified in DDG-51 FLIGHT IIA and LPD-17 Class ships. Fire insulation is also installed over certain types of fragmentation protection (such as KEVLAR) to minimize the possibility of the release of toxic gas in the event of a fire.

635-1.1.4 DEFINITION OF TERMS. The following definition apply to terms used in this manual:

635-1.1.4.1 Blanket Insulation. A relatively flat and flexible insulation in sheet form furnished in units of substantial area.

635-1.1.4.2 Block Insulation. Rigid insulation preformed into rectangular units.

635-1.1.4.3 Board Insulation. Semi-rigid insulation preformed into rectangular units having a degree of suppleness particularly related to their geometrical dimensions.

635-1.1.4.4 Coating. A liquid or semi-liquid applied to the lagging surface that dries or cures to form a protective finish, and prevents the passage of fluids, liquids, or gases through the lagging and into the insulation.

635-1.1.4.5 Conduction. Conduction is the heat flow from one part of a body to another part of the same body, or from one body to another with which it is in physical contact, without displacement of the particles of the body. This matter of heat flow is most important in insulation; it is the low conduction that results in the greatest temperature differential between a hot insulated surface and the atmosphere (as in steam piping insulation), or a relatively warm atmosphere and a cold surface (as in refrigerating plant insulation). Heat transfer from insulated pipes or large blanketed or cemented surfaces (turbines and evaporators) to the outer surface of their lagging is included in this mode. Conduction is associated with solids; comparison of materials in this respect is measured by the thermal conductivity or k factor.

635-1.1.4.6 Thermal Conductivity. This characteristic of materials, also referred to as the k factor, expresses the rate of heat conductivity in British thermal units (Btu) per inch of material thickness per hour per square foot of area per degree F temperature differential. Representative values of thermal conductivity, k, are shown in Table 635-1-1.

635-1.1.4.7 Convection. Convection is the process by which heat is transferred from one point to another within a fluid, gas, or liquid, by circulating or mixing one portion of the fluid with another. These currents are produced by warm fluid being displaced by heavier cold fluid. Convection reduces the effectiveness of air space insulation unless such space is very small.

635-1.1.4.8 Radiation. Radiation is the method of heat transfer by which a hot body gives off energy in the form of radiant heat that is emitted in all directions. Radiant heat, like light, travels in straight lines at the speed of light. The surface condition greatly affects the ability of a body to radiate heat. Radiation from surfaces varies from very low values for aluminum, polished copper, or polished steel to a relatively high value for a black painted surface. Conversely, bright, shiny, smooth surfaces are good heat reflectors.

635-1.1.4.9 Surface Emissivity. Surface emissivity (E) is the ability of an opaque material to emit radiant energy as a result of its temperature. It is measured by the ratio of the rate of radiant emission of the material to the corresponding emission of a thermally black body at the same temperature (1.0). Almost all shipboard mate-

rials have high emissivity (0.9 or higher); that is, regardless of optical appearance, they are thermally black or very dark grey. Exceptions are highly polished bare metals, which have emissivities of approximately 0.1, and aluminum paints, which have emissivities varying from 0.3 to 0.4. If it is necessary to estimate the emissivity of a surface, such as a white-painted pipe covering, 0.95 is a good estimate.

635-1.1.4.10 High Temperature Insulation Cement. A mixture of dry, granular, flaky, fibrous, or powdery materials that when mixed with water develops into a plastic consistency and when dried in place forms a coherent covering that provides substantial resistance to heat transmission.

635-1.1.4.11 Finishing Cement. A mixture of fibrous or powdery materials, that when mixed with water develops a plastic consistency and a relatively hard, protective surface. Finishing cement is not an effective insulation material. It is intended to be used only to provide a smooth final surface. In those applications where cement is to act as an insulation material, high temperature cement shall be used.

635-1.1.4.12 Lagging. The protective and confining jacket or covering placed over the actual insulation material.

635-1.2 HEALTH AND SAFETY PRECAUTIONS

635-1.2.1 Health and safety precautions shall be rigidly followed when handling dust and fiber-producing materials such as asbestos, ceramic fibers, or fibrous glass. When work is performed on older ships, extra care shall be exercised to ensure that personnel do not come into contact with products containing asbestos or ceramic fibers. Permissible levels of exposure, hygienic control measures, protective equipment, medical surveillance requirements and other pertinent data governing occupational hazards involved in applying, removing, using, handling, storing, processing, disposing of, or transporting materials that contain asbestos or ceramic fibers are addressed in **Section 10**.

SECTION 2.

THERMAL INSULATION FOR PIPING

635-2.1 MATERIALS

635-2.1.1 INSULATION. Piping insulation materials for use aboard naval ships are listed in MIL-STD-769. They are also listed in the Federal Supply Catalog under Federal Supply Classes (FSC) 5640, 8040, and 9330. These materials and the nominal thicknesses shown are limited to specified temperature ranges and upper limits. When repair work requires material replacement, requirements of MIL-STD-769 shall be followed.

635-2.1.2 INSULATION CHARACTERISTICS. The following characteristics of thermal insulating materials were considered before incorporation into MIL-STD-769:

a. Low heat conductivity

b. Fire resistance

c. Light weight

d. Capability of easy molding and application

e. Moisture repellent

f. Noncorrosive, insoluble, and chemically inactive

g. Composition, structure, and characteristics unchanged by temperatures at which it is to be used

h. Once installed, should not cluster, become lumpy, disintegrate, or build up in masses from vibration

i. Vermin-proof

j. Hygienically safe to handle.

WARNING

MIL-P-15280 is not approved for new construction and is only listed because of its presence on older ships.

WARNING

MIL-I-24703 has been discontinued by the manufacturer and is only listed because of its presence in some ship Classes.

WARNING

Do not use substitutes that do not conform to specifications and standards noted in paragraph 635-2.1.3 because of potential fire, smoke, and other safety hazards.

635-2.1.3 INSULATING FORMS. Insulating materials listed in MIL-STD-769 are available in the following forms in accordance with Federal, Military and Commercial specifications.

a. Preformed Sectional Pipe Covering:
   1 Thermal insulation pipe covering, MIL-I-2781
   2 Plastic foam, unicellular (Form T), tubular, elastomeric, MIL-P-15280
   3 Fibrous glass sectional pipe covering, MIL-I-22344
   4 Preformed polyimide foam insulation, DOD-I-24688, faced and unfaced
   5 Anti-sweat insulation, tubular form, Electric Boat Corporation Specification 4013, 180°F maximum: Armstrong NH Armaflex manufactured by Armstrong World Industries Inc., Marietta, PA 17547, or equal
   6 Polyphosphazene elastomeric foam insulation, MIL-I-24703.

b. Block: thermal insulation block, MIL-I-2819.

c. Blankets, Sheets and Felts:

1 Thermal glass fiber insulation felt, MIL-I-16411
2 Insulation blanket, thermal fibrous mineral, MIL-I-2818
3 Plastic foam, unicellular (Form S), sheet form, elastomeric, MIL-P-15280
4 Sheet form polyimide foam insulation, DOD-I-24688, faced and unfaced
5 Anti-sweat insulation, sheet form, Electric Boat Corporation Specification 4013, 180°F maximum: Armstrong NH Armaflex manufactured by Armstrong World Industries Inc., Marietta, PA 17547, or equal
6 Polyphosphazene elastomeric foam insulation, MIL-I-24703.

d. Cements:
1 High temperature insulation cement, MIL-C-2861
2 Finishing cement, ASTM C449
3 Blended hydraulic cement, ASTM C595.

635-2.2 PREFORMED PIPE COVERING

635-2.2.1 THERMAL INSULATION PIPE COVERING. Thermal insulation pipe covering, MIL-I-2781, is a compounded material usually consisting of molded calcium silicate or diatomaceous earth. It is used in both single- and multi-layers and is suitable for temperatures up to 1,200°F. MIL-I-2781 shall be used in high-traffic areas where the installed insulation and lagging will be subject to wear and damage during routine operations.

635-2.2.2 ANTI-SWEAT INSULATION. Anti-sweat pipe insulation is applied to piping systems carrying fluids with temperatures below 100°F. Anti-sweat pipe insulation materials that have been used are as follows: PVC/nitrile unicellular elastomeric foam plastic, MIL-P-15280; polyphosphazene elastomeric foam, MIL-I-24703; and preformed polyimide foam, DOD-I-24688, Type I with a mylar or aluminized vapor barrier. All repairs and replacement of these anti-sweat insulation materials shall be accomplished using the anti-sweat insulation materials conforming to Electric Boat Corporation Specification 4013 sheets and tubes. For new ship designs, anti-sweat insulation materials conforming to Electric Boat Corporation Specification 4013 sheets and tubes shall be installed.

635-2.2.3 ELASTOMERIC FOAM PLASTIC. Elastomeric foam plastic, MIL-P-15280, is a chemically-expanded unicellular plastic foam. This material is no longer being specified for use aboard Navy ships due to the amount of toxic smoke released when this material burns. All repairs and replacement of this material shall be made using material conforming to Electric Boat Corporation Specification 4013.

635-2.2.4 PREFORMED FIBROUS GLASS PIPE COVERING. Preformed fibrous glass pipe covering, MIL-I-22344, consists of resin impregnated fibrous glass, compressed or otherwise formed into pipe covering. This low-density (3.0 to 6.5 lbs/ft^3) material is furnished in 3- to 6-foot sizes. It is fire and vermin-proof. The material is used for hot pipe insulation in the 125°F to 370°F temperature range. MIL-I-22344 shall be installed only on vertical piping or in low-traffic areas for surface ships only. It shall only be installed on piping of 1-inch nominal pipe size (nps) or less.

635-2.2.5 PREFORMED POLYIMIDE FOAM INSULATION FOR HOT PIPING, DOD-I-24688, TYPE I, WITHOUT A VAPOR BARRIER. Preformed polyimide foam is a flexible, open cell foam used for piping and machinery systems on new construction ships and retrofit of existing ships. It is produced in preformed sectional and continuous forms. The cut edges are sealed together with adhesive, MIL-A-24179. Polyimide foam has the advantages of low thermal conductivity and low density (nominal 0.6 lb/ft^3). It possesses excellent flammabil-

ity properties, including extremely low flame spread, virtually no smoke and negligible toxicity. This material is used for hot pipe insulation in the 100°F and 370°F temperature range.

635-2.2.6 THERMAL INSULATION BLOCK. Thermal insulation block, MIL-I-2819, is furnished in two classes according to the allowable temperatures for which the materials are suitable. Class 2 of the specification covers insulation material for temperatures up to 1,200°F. The maximum density for this class is 14 lbs/ft^3 . Class 3 of MIL-I-2819 has a maximum density of 22 lbs/ft^3 , and is suitable for temperatures up to 1,500°F. Materials of both classes under MIL-I-2819 shall have a minimum compressive strength of 50 lbs/in2 at not more than 5 percent deformation.

635-2.3 BLANKETS, SHEETS AND FELTS

635-2.3.1 THERMAL GLASS FIBER INSULATION FELT. Thermal glass fiber insulation felt, MIL-I-16411, is made of staple glass fibers laminated and felted without use of binders. This configuration was formerly designated as Type II until Type I was discontinued at which time type designations became unnecessary. All applications requiring MIL-I-16411, Type II are replaced by MIL-I-16411. Type I, which is no longer used for Naval shipbuilding and repair, has been deleted from MIL-I-16411. Type I was made of staple glass fibers felted into coverings in woven yarn or bonded with wire-inserted yarn. Whenever MIL-I-16411 material has been used, it may be replaced or repaired, when necessary, by the current MIL-I-16411 material. It is available in rolls 60 inches wide, 75 feet long for 1/2-inch thicknesses and in 45-foot rolls for 3/4-inch and 1-inch thicknesses. It is flexible and suitable for all temperatures up to 1,200°F. This material is used as thermal insulation on machinery and equipment such as steam turbines and boilers. It is also used in flexible covers for valves, fittings, and flanges. This glass fiber insulation has low thermal conductivity and conforms well to irregular surfaces.

635-2.3.2 REFRACTORY FIBER THERMAL INSULATION BLANKET. Refractory fiber thermal insulation blanket, MIL-I-23128, used to be specified for applications at temperatures up to 2000°F. A fleet advisory dated November, 1986, was issued and stated that refractory fiber thermal insulation shall not be installed aboard ship unless there are no known substitutes for its replacement. For temperatures up to 1000°F, fibrous mineral wool thermal insulation blanket, MIL-I-2818, or fibrous glass felt, MIL-I-16411, may be used in its place. MIL-I-16411 may also be used for temperatures up to 1200°F.

635-2.3.3 FIBROUS MINERAL WOOL THERMAL INSULATION BLANKETS. Fibrous mineral wool thermal insulation blanket, MIL-I-2818, consists of either rock or slag or mixtures of these processed from a molten state into fibrous form and then felted into blanket form. It is also available secured between metallic supporting members. The density of this material is 8-12 lbs/ft^3 . This mineral fiber insulation has low thermal conductivity and is fire resistant. It is used for insulating hot surfaces of machinery, boilers, equipment, and uptakes at temperatures up to 1000°F.

635-2.3.4 THERMAL INSULATING TAPE (FOR TEMPORARY REPAIR). Thermal insulating tape is composed of a woven glass jacket, MIL-C-20079, enclosing fibrous glass felt, MIL-I-16411. The jacket may be either in one tubular piece or fabricated of glass cloth sewed into tubular form. An inner jacket of 0.008-inch crimped, stainless steel mesh is used where thermal insulation tape is needed and where the temperature of the hot surface is 450°F, or above. Alternatively, the inner surface of the insulation tape may be fabricated with wire-reinforced glass cloth conforming to HH-P-31, Type I, Class 1, on the inside and end surfaces. Thermal insulation tape shall only be used on a temporary basis, as discussed in paragraph 635-2.10.5.

635-2.3.5 SHEET FORM INSULATION. Elastomeric foam plastic sheet, MIL-P-15280, Type S, may be found on ships built prior to SEAWOLF Class. If that material requires repair or replacement, use materials listed below. Sheet form insulation may be used on pipe sizes too large for the preformed type, and in the fabrication of valve and fitting insulation.

635-2.3.5.1 Anti-sweat insulation in accordance with Electric Boat Corporation Specification 4013 shall be used between -20°F and 100°F; however, it may be used up to 180°F.

635-2.3.5.2 Polyimide foam in accordance with DOD-I-24688, Type I may be used between 100°F and 370°F.

635-2.4 CEMENTS

635-2.4.1 HIGH TEMPERATURE INSULATING CEMENT. High temperature insulating cement, MIL-C-2861, is composed of a dry mixture of rock or mineral fibers and clay binders, thoroughly mixed to obtain uniform distribution of the ingredients. It is most suitable for insulating large or irregular surfaces. The composition of the cement is such that when properly mixed with fresh water, it can be applied with a trowel or by hand to hot and cold surfaces. One hundred pounds of dry cement will cover 50 square feet of surface to a thickness of 1 inch. After application, it weighs a maximum of 30 lbs/ft^3 . The cement is reclaimable for reuse. It is suitable for use at temperatures from 100°F to 1,800°F service. It is very important that all rock or mineral type cements shall have corrosion-resisting properties conforming to the specification. This cement may be used to fill all cracks when using block or sectional pipe insulation used on fittings or valves, and over wire netting to smooth the surface.

635-2.4.2 FINISHING AND INSULATING CEMENT. Finishing and insulating cement, ASTM C449, is a hydraulic setting cement composed of a dry mixture of modulated rock or mineral wool fibers and a hydraulic binder. One hundred pounds of cement has a covering capacity of 30 square feet to a thickness of 1 inch. This cement is used as a surface finish over insulating material to provide a hard, smooth finish to which lagging is applied. It also may be used as insulating material for small valves and fittings up to 1 inch in size. High-temperature insulating cement, MIL-C-2861, or a mixture of 80 percent MIL-C-2861 and 20 percent ASTM C595 may also be used to produce a smooth finish over insulation before lagging is applied.

635-2.4.3 LAGGING. Lagging materials protect the relatively soft insulating material from mechanical abuse to which it is exposed aboard ship as a result of sailors climbing over piping and the necessary handling of equipment. It supports the insulating material that is subjected to continual vibration, and provides a smooth surface for painting.

635-2.4.3.1 Lagging Systems Materials. The following materials are used in lagging systems:

a. Cloth:
   1 Fibrous glass cloth, tape, and thread (for lagging insulation), MIL-C-20079
   2 Fibrous glass wire-reinforced cloth and tape lagging material, HH-P-31.

b. Silicone Rubber Coated and Aluminized Fibrous Glass Cloth:
   1 Alpha lightweight 2337-2-TA, manufactured by Alpha Associates, Inc., Woodbridge, NJ 07095, or equal
   2 Alpha heavyweight 2025-2-AMA, manufactured by Alpha Associates, Inc., Woodbridge, NJ 07095, or equal

3 3M SRGA-0214, manufactured by Minnesota Mining and Manufacturing Co., St. Paul, MN 55144, or equal.

c. Silicone Rubber Coated Fibrous Glass Cloth:

1 Claremont Scuffcoat, manufactured by The Claremont Co., Meriden, CT 06450, or equal

2 Alpha 8359-2-SS, manufactured by Alpha Associates, Inc., Woodbridge, NJ 07095 or equal.

d. Metallic:

1 Zinc coated (galvanized), sheet steel, ASTM A526, Coating Designation G 115

2 Aluminum, ASTM B209, Type 601-0

3 Corrosion-resistant steel (CRES), ASTM A167, Type 304.

635-2.4.3.2 Fibrous Glass Cloth and Tape. Fibrous glass cloth and tape, MIL-C-20079, are manufactured from a good quality of fibrous glass yarn. The tapes and cloths are made in various weights. These materials may be use for lagging where internal contact temperatures do not exceed 450°F. The MIL-C-20079, Type I, Classes 4, 6, and 8 fibrous glass cloth with pre-applied rewettable adhesive manufactured by BGF Industries, 3802 Robert Porcher Way, Greensboro, NC 27410 is an alternative and preferred system to the fibrous glass cloth adhered with MIL-A-3316 adhesive for lagging. Rewettable lagging in accordance with MIL-C-20079, Type I, Class 6 or 8 and manufactured by BGF Industries is the lagging qualified for fire performance for use with insulation conforming to Electric Boat Corporation Specification 4013.

635-2.4.3.3 Fibrous Glass Metallic Cloth and Tape. Fibrous glass metallic cloth and tape lagging, HH-P-31, are manufactured from wire-reinforced fibrous glass yarn. The materials come in two types, plain and friction-treated. Type I (plain) fibrous glass metallic cloth is used as the inner (hot) side of thermal insulation tape in applications where the surface temperature is 450°F or greater. It is also used on the inside and end surfaces of flexible covers for valves and fittings when the surface temperature of the valve or fitting is 450°F or greater.

635-2.4.3.4 Metallic Lagging. Metallic lagging is used as described in paragraph 635-2.6.8 covering application of insulating materials.

635-2.4.4 SILICONE RUBBER COATED/ALUMINIZED AND SILICONE RUBBER COATED FIBROUS GLASS CLOTHS. Silicone rubber coated/aluminized fibrous glass cloth is manufactured from a good quality fibrous glass that is coated with a silicone rubber coating and an aluminized film. The silicone rubber coated fibrous glass cloth is manufactured from a good quality fibrous glass that is coated with an aluminum pigmented silicone rubber coating. The aluminized surfaces on both cloths provides low emissivity, which is considered advantageous in the overall reduction of heat stress in the engineering space. The intent of the silicone rubber coating is to allow for greater durability and improved moisture and oil resistance. In effect the coating protects the insulation from fluid contamination. The material may be used for lagging where internal contact temperatures do not exceed 450°F.

635-2.4.5 ADHESIVE. Adhesive materials are as follows:

a. Adhesive, MIL-A-3316, is suitable for securing cloth lagging materials to all insulation. Adhesives conforming to this specification will not adversely affect either insulation or glass cloth.

b. Adhesive, MIL-A-24179, or equal, such as Foster's Adhesive 8248 manufactured by H.B. Fuller Co., Houston, TX is used for securing materials conforming to and polyimide foam insulation to themselves and to metals. Rubatex R373 and Armstrong 520 are the only adhesives qualified for use with insulation conforming to

Electric Boat Corporation Specification 4013 for surface ships. For submarines, Rubatex R373 adhesive is approved for use with insulation conforming to Electric Boat Corporation Specification 4013.

c. Sodium silicate solution, ASTM D3400, is an adhesive used for joining segments of MIL-I-2781.

635-2.5 COATINGS

635-2.5.1 COATING. Coating materials are covered by the following military specifications:

a. Fire-resistant vapor-barrier coating, MIL-C-19565, Type II, that is for indoor use only

b. Compound, end-sealing, thermal insulation pipe covering; fire, water, and weather-resistant, MIL-C-22395.

635-2.5.2 FIRE-RESISTANT VAPOR-BARRIER COATING. Fire-resistant vapor-barrier coating, MIL-C-19565, Type II, is applied either with a stiff brush or a trowel over the lagging on all porous antisweat and refrigerant insulation material. It prevents the passage of atmospheric water vapor into the insulation where it will condense and cause the insulating material to become water soaked.

635-2.5.3 END-SEALING COMPOUND. End-sealing compound, MIL-C-22395, is used primarily on hot piping insulation exposed to the weather. The application to the lagging prevents soaking of the insulation by rain or seawater.

635-2.5.4 PAINT. Lagged and unlagged insulation shall be painted as follows:

1. Cloth and tape lagging is to be painted after installation with one coat of non-flaming paint conforming to formula No. 124 of DOD-E-24607 or water-based paint qualified to DOD-C-24596, or Navy formula 25A, if necessary, for appearance.
2. Unlagged insulation is to be painted with fire-retardant paint conforming to DOD-E-24607 or water-based DOD-C-24596 or Navy formula 25A. The following miscellaneous materials are used to protect elastomeric foam plastic insulation. Experience has shown that these products provide satisfactory results: However, other products may be used provided they are equal in terms of performance.
   a Water-based paint qualified to DOD-C-24596, Type I, is used to ensure the integrity of joints and seams in unlagged elastomeric foam. Some products, particularly those containing solvents, will break down the adhesives in the seams/joints of the elastomeric foam plastic, causing the seams or joints to open.
   b Ocean 634, manufactured by Ocean Chemicals, Inc., Savannah GA is a waterbased primer for Ocean 9788. It is applied over a base coat of MIL-C-24596, Type I when the insulation is not lagged.
   c Ocean 9788 is a modified alkyd (resin) fire retardant paint that is applied over the Ocean 634 primer. The paint is used as a precaution against shipboard fire.

635-2.6 INSTALLATION OF PIPING INSULATION

635-2.6.1 REQUIREMENTS FOR THERMAL INSULATION. The type and thickness of thermal insulation to be installed on ship piping systems shall be in accordance with Table 635-2-2 through Table 635-2-7. These tables are based on the requirements of MIL-STD-769; in the event that there is a conflict, the provisions of MIL-STD-769 shall apply. Insulation is installed on piping and lagged as shown on NAVSEA drawing 804-5959214 and in accordance with the instructions below.

635-2.6.2 PREPARATION. Piping surfaces shall be prepared in accordance with Section 631 of Ship Specifications for New Construction, or **NSTM Chapter 631, Preservation of Ships in Service (Surface Preparation and Painting)** , for ships undergoing overhaul or repairs.

635-2.6.3 TREATMENT OF UNINSULATED PIPING. Where it is not feasible to apply insulation, paint the piping with two coats of heat and weather resistant paint, TT-P-28, and install suitable guards to protect personnel and to prevent contact with flammable materials.

WARNING

Where there is danger of personnel coming into contact with hot piping, protection shall be provided with a perforated CRES or aluminum shield that surrounds the pipe with approximately a 1/2-inch standoff from the pipe.

635-2.6.4 EXCEPTIONS TO INSULATION REQUIREMENTS. In general, insulation is required on all machinery, piping, and equipment having external surface temperatures of 125°F, or higher. However, the following equipment shall not be insulated:

a. Any hot surface for which freedom from insulation is essential for its proper operation, such as a boiler gauge glass.

b. Relief valves, and piping beyond the valve discharge, except as required for personnel protection.

c. Pressure-gauge piping.

d. Soot-blower valve units and soot-blower flanges.

e. Piping in bilges.

f. Piping in voids and cofferdams except where omitting insulation may be detrimental to system operation, such as catapult steam.

g. Safety-valve bodies, springs, and lifting gear.

h. Mechanical joints exposed to sub-atmospheric pressures.

i. Piping over shower stalls, behind, and under lavatories.

j. Steam and water piping under and around kettles in galley wet deck area. Where there is danger of personnel coming into contact with hot piping, provide protection with a perforated CRES or aluminum shield that surrounds the pipe with approximately a 1/2-inch standoff from the pipe.

k. Valves or flanges on Sewage Collection, Holding and Transfer (CHT) system.

635-2.6.5 UNSPECIFIED SURFACES. Where the detailed instructions that follow here do not include a specific surface requiring insulation, such surface will be insulated in a manner similar to the requirements for the condition that most nearly approximates that of the surface in question.

635-2.6.6 CLOTH LAGGING SECURED WITH ADHESIVE. Where methods of application require cloth lagging to be secured to the insulation with adhesive, the intent is to completely adhere the cloth to the entire

outer surface of the insulation and to seal the cloth surface with adhesive. All lagging shall be fitted securely, lapping all joints by at least 2 inches, and shall present a smooth appearance. Removable pads and thermal insulation tape shall be covered with one coat of adhesive cement, MIL-A-3316, after insulation. Glass cloth (rewettable) lagging (see paragraph 635-2.4.3.2), is an alternative and preferred system to the fibrous glass cloth adhered with MIL-A-3316 adhesive for lagging. However, it should not be used in areas subject to live steam or dampness. Cloth and tape lagging shall be sized with one coat of adhesive cement, MIL-A-3316 and allowed to dry before being covered with one coat of fire-retardant paint, DOD-E-24607 or equal, such as Ocean 88, manufactured by Ocean Coatings, Inc., Savannah, GA, or water-based DOD-C-24596 or Navy formula 25A after insulation. The inside surface (hot side) of removable insulation, including reusable covers, shall not be painted.

635-2.6.7 SECTIONAL PREFORMED INSULATION APPLICATION. Sectional preformed thermal insulation shall be applied with end joints broken by starting with a whole-length piece and a half-length piece. Insulation shall not be installed over mechanical, welded, or brazed joints in piping until specified pressure tests have been completed. When two or more lines that have a common pipe hanger and similar temperatures are spaced such that full insulation cannot be applied to the individual pipes, the pipes shall be insulated as a unit up to the point where individual application becomes practicable. Adjacent pipes having separate hangers, dissimilar temperatures, or operating characteristics shall not be insulated as a unit. When local interference arises, an equal amount of insulation shall be removed from each of the involved lines; minimum spacing between insulated pipes or structures shall be 1/4-inch. When necessary to remove over 50 percent of the insulation thickness at any point on a pipe due to interference, approval shall be obtained from the ship design office. Where bends are encountered in the piping, sectional preformed insulation material shall be cut or mitered to provide a smooth fit around the contour of the bend. Each segment shall be securely fastened in place. All openings shall be filled with high temperature cement, and the surface smoothed using finishing cement troweled to a uniform finish. When damaged pipe insulation is replaced by insulation of greater thickness, the transition joint shall be tapered over at least 3 inches with high temperature cement.

635-2.6.8 METAL LAGGING INSTALLATION. Metal lagging shall be installed to protect insulation from chafing or abrasion, or where the insulation may become oil soaked. It shall also be installed where personnel may step on piping. Metal lagging may be galvanized steel, aluminum, or stainless steel, except that only galvanized steel shall be used for boiler uptakes. Lagging shall be rolled or otherwise formed to fit the insulation with allowance for lap joints. Joints shall be oriented to facilitate runoff of impinging liquids. Metal lagging shall be secured with metal bands or self-tapping screws.

635-2.7 MAINTENANCE OF THERMAL INSULATION

635-2.7.1 SCHEDULED MAINTENANCE. Scheduled maintenance shall be conducted in accordance with the Planned Maintenance System (PMS) where PMS has been installed.

635-2.8 INSPECTION OF THERMAL INSULATION

635-2.8.1 VISUAL INSPECTIONS. At least once a year, and preferably at 6-month intervals, a careful inspection will be made of insulation.

635-2.8.2 BROKEN OR LOOSE INSULATION. All broken or loose insulating or lagging materials shall be securely fastened in accordance with instructions herein. If such material is broken, a complete reinstallation may be necessary.

635-2.8.3 WATER DAMAGE. In the course of emergency repairs as a result of water damage, insulation shall be stripped from the piping surface. This procedure will prevent serious corrosion of piping by insulation that retains a large amount of water after dewatering operations.

635-2.8.4 HEAT LOSS DETECTION. An infrared thermometer or heat gun may be used in the inspection of insulation to locate hot spots where temperatures exceed limits specified in paragraph 635-1.1.1. Once the hot spots have been located, corrective action can be initiated. This procedure may be used in shipboard maintenance programs and also in Pre-Overhaul Tests and Inspections (POT & I) to identify insulation replacement requirements.

NOTE

Items or systems being inspected should be operating normally and should have stabilized at normal operating temperatures.

635-2.8.5 HEAT GUN. The heat gun is an instrument that indicates surface temperature without contacting the heated surface. Minimum heat gun specifications are contained in Table 635-2-1. Hand-held heat guns are commercially available from the following sources, or equal:

1. William Wahl Corporation5750 Hamum AvenueCulver City, CA 90230
2. Williamson Corporation70 Domino DriveP. O. Box 1270Concord, MA 01742
3. AGA Corporation550 County AvenueSecaucus, NJ 07094
4. Mikron Instruments CompanyP. O. Box 211Ridgewood, NJ 07451

Table 635-2-1 HEAT GUN SPECIFICATIONS

Temperature measuring range	70 - 600°F
Working distance	2 - 20 feet
Response time	< 1 sec
Emissivity range	0.4 - 1.0
Weight	< 4 lbs
Readout	Digital or dial

635-2.8.6 HEAT GUN OPERATION. The heat gun is sighted on the object to be inspected, using the sight that is built into the instrument. The insulated surface to be inspected is scanned with the gun. When a location with inadequate or deteriorated insulation (hotspot) is passed, the readings will increase significantly. This location shall be noted.

NOTE

The heat spy gun is to be used only as a nonquantitative survey device to locate sources of high heat loss. In the shipboard environment, it is not a reliable device when used for the absolute measurement of surface temperatures, because of emissivity or interferences from extraneous sources of radiant heat.

635-2.8.7 HEAT GUN STORAGE. When not in use, the heat gun is to be stored in an area having an ambient temperature of 100°F or less.

WARNING

Dust-producing materials such as asbestos or ceramic fibers can be hazardous to health. Prior to removal or replacement of cloth lagging or insulation, see paragraph 635-1.2.1.

635-2.8.8 HEAT GUN CHECKS. The heat gun shall be carefully checked, calibrated, and operated in accordance with the directions provided with the instrument. Particular importance will be given to checking for the proper emissivity setting. The following emissivity values are recommended in conjunction with this procedure:

1. DOD-E-24607, Formula 124 White Paint (clean) - 0.9.
2. TT-P-28, Aluminum Paint (clean) - 0.4.

The heat gun cannot be used for surfaces of very low emissivity such as aluminum foil. Because the heat gun is used in this procedure as a nonquantitative survey device, calibration under the Navy Metrology and Calibration Program (METCAL) is not required. If the zero-adjustment of the heat gun cannot be accomplished, place the instrument in a cool airstream until the instrument stabilizes and then proceed with readings.

635-2.9 CORRECTIVE ACTION

635-2.9.1 GENERAL. Corrective action for insulation.

1. Check for missing or deteriorated insulation on adjacent pipes or surfaces. If this condition exists, insulate these surfaces in accordance with requirements and reinspect the original surface using the procedures outlined in paragraph 635-2.8.1 through paragraph 635-2.8.7.
2. Any PVC/nitrile (MIL-P-15280), polyphosphazene elastomeric foam (MIL-I-24703), or polyimide foam (DOD-I-24688, Type I) used for anti-sweat insulation, that is removed shall be replaced with anti-sweat insulation materials conforming to Electric Boat Corporation Specification 4013. When repairing or replacing sections of polyimide (DOD-I-24688, Type I) anti-sweat insulation, seal the cut ends of the insulation with a coat of solvent based vapor barrier (MIL-C-19565, Type II). This has to be done immediately to prevent moisture vapor from becoming entrapped in the foam.
3. Verify that the actual thickness of the installed insulation is in agreement with the thickness specified for the particular application. Replace insulation with proper thickness, if required.
4. Check for voids under removable covers. Void space shall be filled with layers of glass felt (MIL-I-16411) to the thickness of the adjoining pipe covering.
5. Replace insulation and lagging if missing, damaged, or crushed.
6. If insulation is found to be oil or water soaked, remove all affected insulation, repair source of oil or water leak, and replace with clean, dry insulation.
7. Repair or replace insulation found to be loose or improperly installed.
8. Reinspect insulation per procedures outlined herein.

635-2.10 THERMAL INSULATION TO PIPE OR TUBING APPLICATION

635-2.10.1 HOT PIPING SYSTEMS (125°F TO 1,050°F), EXCEPT WEATHER DECK PIPING. Hot piping systems shall be insulated with preformed sectional pipe covering, fabricated of material conforming to Electric Boat Corporation Specification 4013 (for temperatures up to 180°F only), calcium silicate (MIL-I-2781), fibrous glass (MIL-I-22344) (for temperatures up to 370°F only), polyimide foam (DOD-I-24688) (for temperatures up to 370°F only), or thermal insulation tape (MIL-C-20079) and fibrous glass felt (MIL-I-16411). MIL-I-22344 shall only be installed on piping no greater than 1-inch nps for temperatures between 125°F and 370°F. MIL-I-22344 shall not be installed in designated ″high traffic″ areas unless in a vertical orientation. MIL-I-2781 is recommended for use in those ″high traffic″ areas or where the insulation will not be installed in a vertical orientation. Approved materials, temperature limitations, and installation procedures are given in paragraph 635-2.10.2 through paragraph 635-2.10.9.

635-2.10.2 PREFORMED SECTIONAL PIPE COVERINGS. Calcium silicate may be applied to all pipe, size 1/2-inch and larger, for temperatures between 125°F and 1,050°F, in accordance with Table 635-2-2. Insulation shall be applied directly to the pipe (See Figure 635-2-2.) When a single layer of insulation is installed, butt joints of the two halves of the sectional insulation shall be staggered. When a single layer of insulation is used at temperatures above 600°F, provisions shall be made to permit thermal movement of the piping, without opening of insulation joints. Wherever possible, double layer construction shall be installed at temperatures above 600°F.

Table 635-2-2 THICKNESS OF INSULATION FOR HOT PIPING CONFORMING TO MIL-I-2781

Nominal Pipe Size(inches)	Maximum OperatingTemperature (°F)	Nominal Thickness(Total inches) [1/2]
1/2, 1-1/2	125-388	1-1/2
	389-750	2-1/2
	751-950	3
	951-1050	4
2, 2-1/2	125-338	1-1/2
	339-388	2
	389-900	3
	901-1050	4
3 through 4-1/2	125-338	1-1/2
	339-388	2-1/2
	389-500	3
	501-900	3-1/2
	901-950	4
	951-1050	4-1/2
5, 6, 7	125-338	1-1/2
	339-388	2-1/2
	389-750	3-1/2
	751-900	4
	901-950	4-1/2
	951-1050	5-1/2
8 and larger	125-338	1-1/2
	339-388	2-1/2
	389-500	3-1/2
	501-750	4
	751-900	4-1/2

Table 635-2-2 THICKNESS OF INSULATION FOR HOT PIPING

CONFORMING TO MIL-I-2781 - Continued

Nominal Pipe Size(inches)	Maximum OperatingTemperature (°F)	Nominal Thickness(Total inches) [1/2]
	901-950	5
	951-1050	6

NOTE

1. Does not include finishing cement.
2. Wherever possible, double layers shall be used where temperatures exceed 600°F. Double layers may be used at temperatures below 600°F.

Each layer of sectional pipe covering shall be secured with wire or flat steel bands. Not less than three fastenings shall be used for securing each 3-foot section of insulation on pipe up to 6 inches; four fastenings shall be used to secure each 3-foot section of insulation on larger pipes. High temperature cement shall be used for filling voids and cracks in the insulation on both the inner and outer layers. The outer surface shall be smoothed using finishing cement troweled to a uniform finish. Insulation shall be lagged with fibrous cloth, MIL-C-20079, Type I, and sized with adhesive, MIL-A-3316 or an alternative and preferred system to the fibrous glass cloth adhered with MIL-A-3316 adhesive is rewettable lagging (see paragraph 635-2.4.3.2) (Figure 635-2-1).

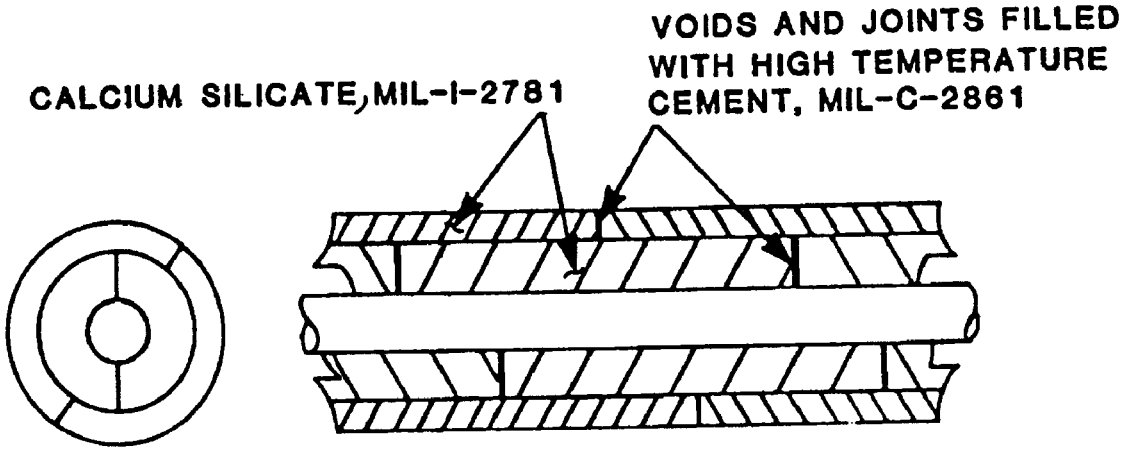

Figure 635-2-1. Double Layer Calcium Silicate Insulation

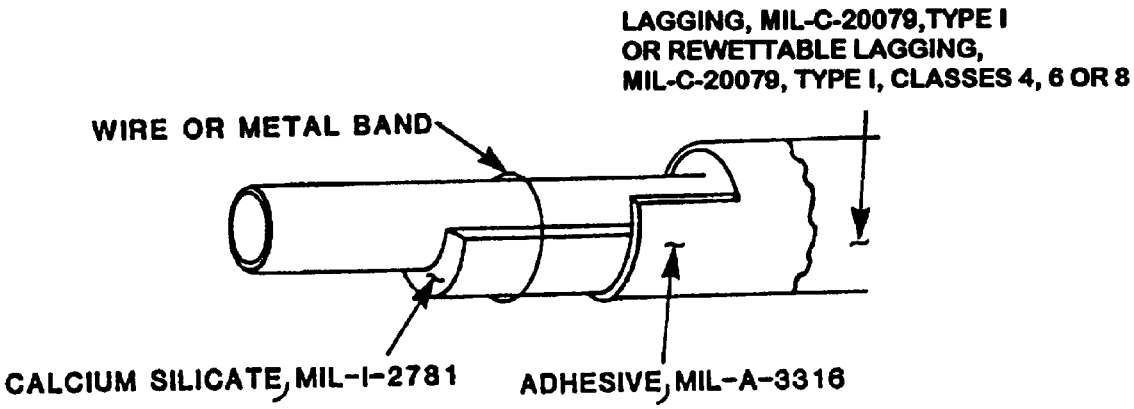

Figure 635-2-2. Typical Installation of Calcium Silicate Pipe Insulation on Hot Piping

635-2.10.3 FIBROUS GLASS PREFORMED SECTIONAL INSULATION. Fibrous glass preformed sectional insulation may be applied to pipe no greater than 1-inch nominal pipe size (nps) (in low traffic areas) for temperatures between 125°F and 370°F. Insulation shall not be installed in designated ″high traffic″ areas unless in a vertical orientation. Thickness shall be in accordance with Table 635-2-3. Insulation shall be applied directly to the pipe; butt joints of the two halves of the sectional insulation shall be staggered. Each section of insulation shall be secured with masking tape. Insulation shall be lagged with fibrous glass cloth, MIL-C-20079, Type I, and sized with adhesive, MIL-A-3316 or as an alternative, lagged with rewettable fibrous glass cloth (see paragraph 635-2.4.3.2).

635-2.10.4 POLYIMIDE FOAM INSULATION. Polyimide foam (DOD-I-24688, Type I) may be applied to all pipe systems for temperatures between 125°F and 370°F. Thickness shall be in accordance with Table 635-2-3. Sections of polyimide foam are produced in tubular form. Sections shall be split longitudinally and installed with all joints sealed, using adhesive, MIL-A-24179. To ensure a complete seal and avoid loss of insulation efficiency, all seams and butt-joints shall be fully covered with adhesive; the surface nearest the pipe will be pressed together first and evenly before joining the entire surface. Alternatively, 3M Y9485* acrylic adhesive transfer tape manufactured by 3M International Tape Division, St. Paul, MN 55144 or equal may be used to secure the self seal lap. This tape shall not be used for sealing butt and longitudinal joints. It is recommended by the manufacturer to not use this tape when ambient temperatures fall below 50°F. Lagging shall be applied over insulation to protect the insulation from damage. Water-based paint qualified to DOD-C-24596, Type I, fire-retardant paint conforming to DOD-E-24607 or Navy formula 25A shall be used to paint the lagged polyimide.

Table 635-2-3 THICKNESS OF INSULATION CONFORMING TO DOD-I-24688, TYPE I, ELECTRIC BOAT CORPORATION SPECIFICATION 4013 AND MIL-I-22344[1/2] , FOR HOT PIPING

Maximum OperatingTemperature Range (°F)	Specification	Nominal Thickness(inches)
125 to 180	Electric Boat CorporationSpecification 4013DOD-I-24688, Type I or MIL-I-22344	1/2
181 to 250	MIL-I-22344DOD-I-24688, Type I	1/23/4
251 to 300	MIL-I-22344DOD-I-24688, Type I	3/41
301 to 350	MIL-I-22344DOD-I-24688, Type I	11
351 to 370	MIL-I-22344DOD-I-24688, Type I	11 1/2

Table 635-2-3 THICKNESS OF INSULATION CONFORMING TO DOD-I-24688, TYPE I, ELECTRIC BOAT CORPORATION SPECIFICATION 4013 AND MIL-I-22344[1/2] , FOR HOT PIPING - Continued

Maximum OperatingTemperature Range (°F)	Specification	Nominal Thickness(inches)
NOTES:1. Install only on piping 1-inch nps or less.2. Shall not be installed in designated ″high traffic″ areas unless in vertical orientation.		

635-2.10.5 THERMAL INSULATION TAPE. Thermal insulation tape may be applied to pipe, size 1/4-inch to 3/4-inch, for temperatures between 125°F and 750°F. Thicknesses shall be in accordance with Table 635-2-4. The tape is fabricated with a glass cloth jacket, encasing fibrous glass felt as shown in Figure 635-2-3. An inner jacket of 0.008-inch crimped, stainless steel mesh is used where pads of thermal insulation tape are needed, and where the temperature of the hot surface is 450°F, or above. Alternatively, the inner (hot) surface of the insulation tape may be fabricated from wire-reinforced glass cloth, HH-P-31, Type I, Class 1. Laterally wrapped thermal tape shall be secured with wire at both ends and elsewhere as required to shape it to the pipe. The longitudinal seam shall be sewn with wire-reinforced thread or equal (Figure 635-2-4). Thermal insulation tape shall be used only on a temporary basis, such as emergency repair of insulation while ship is at sea. Insulation tape shall be replaced by NAVSEA-approved preformed sectional pipe insulation at the earliest opportunity.

Table 635-2-4 THICKNESS OF INSULATION TAPE CONFORMING TO MIL-I-20079 AND MIL-I16441 FOR 1/4-TO 3/4-INCH SIZE HOT PIPING[1/2]

Maximum OperatingTemperature (°F)	Pipe Size(inches)	Nominal Thickness(inches)
125 to 250	1/4, 3/8	3/8
251 to 750	1/4, 3/8	1-1/2
125 to 350	1/2, 3/4	1/2
251 to 388	1/2, 3/4	1
389 to 500	1/2, 3/4	1-1/2
501 to 750	1/2, 3/4	2

NOTES:
1. To be used only on a temporary basis, such as emergency repair of insulation while ship is at sea. These materials are flexible enough for emergency pipe wrapping. Insulation tape shall be replaced by NAVSEA approved pre-formed sectional pipe insulation at the earliest opportunity.
2. Used only as a laminate construction consisting of a glass fabric outer jacket with a fibrous glass felt insert. (An inner jacket of 0.008-inch crimped stainless steel mesh is used where pads of thermal insulation tape are needed and where the temperature of the hot surface is 450°F, or above. Alternatively, pads may be made from material conforming to HH-P-31, Type I, Class 1.)

.

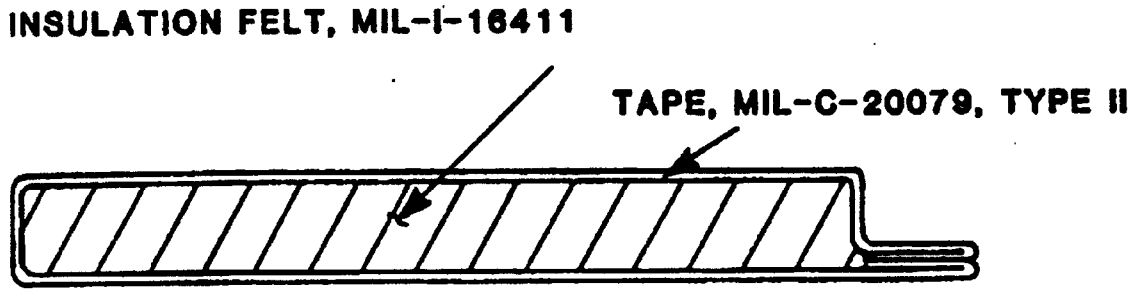

Figure 635-2-3. Thermal Insulation Tape

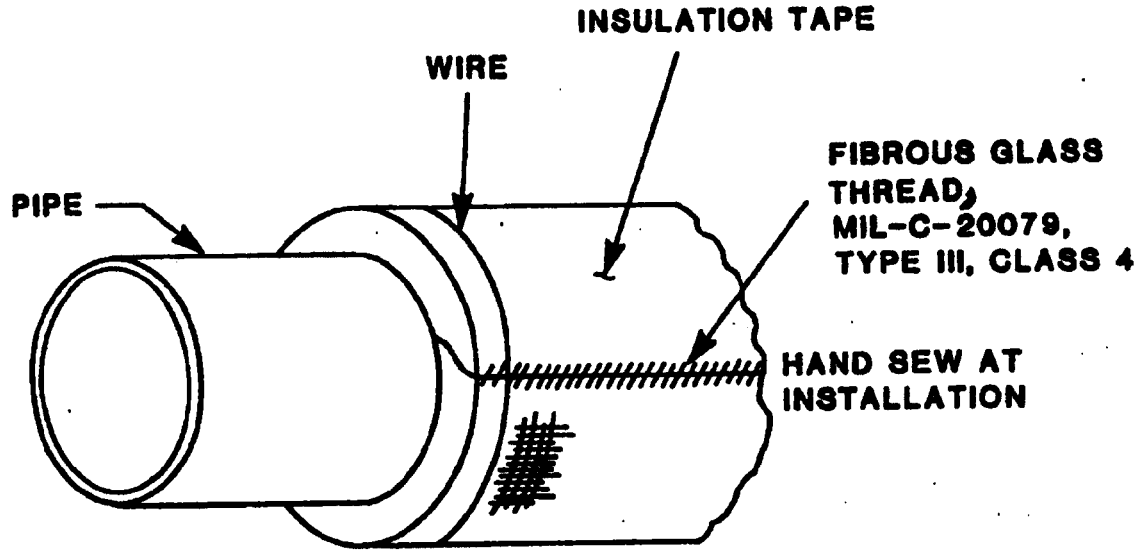

Figure 635-2-4. Typical Lateral Wrapped Insulation Tape Application

WARNING

Asbestos-containing materials shall not be used. Pending revision to BUSHIPS drawing S4823-1385782, the provisions in Note number 5 of the drawing that pertain to the use of asbestos shall be considered canceled. See the following paragraph.

635-2.10.6 PIPE HANGERS. Pipe hangers shall be in accordance with NAVSHIPS drawing 804-1385781 or BUSHIPS drawing S4823-1385782, for surface ships and submarines respectively. Hangers shall be insulated using one of the following procedures:

1. On pipes insulated with calcium silicate, preformed pipe covering may be cut and fitted around the pipe clamp

and hanger. High temperature cement shall then be used to fill voids or cracks in the insulation. The surface is smoothed using finishing cement and lagged with fibrous glass cloth and adhesive or rewettable fibrous glass cloth (see paragraph 635-2.4.3.2).

2. Preformed sectional pipe covering may be stopped where pipe hangers are clamped to the pipe. Fill the remaining space with layers of glass felt to the thickness of the adjoining pipe covering. Use high temperature cement to fill voids in the insulation. The surface is smoothed using finishing cement and lagged with fibrous glass cloth and adhesive.

3. Alternately, preformed sectional pipe covering may be stopped approximately 1 inch from the pipe hanger. Fill the remaining space with layers of glass felt to the thickness of the adjoining pipe covering. Fabricate a flexible cover using insulation felt covered with fibrous glass cloth. Fit the cover around the hanger, overlap the adjacent pipe covering by a minimum of 2 inches, and secure with ring or hook fasteners to form a take-down seam. The thickness of the cover shall conform to Table 635-2-5, as applicable.

Table 635-2-5 THICKNESS OF INSULATING MATERIALS FOR HOT SURFACES OF VALVES AND FITTING UP TO 1,200°F [1]

Maximum Operating Temperature (°F)	[2/3/] MIL-C-20079, Plus Fibrous Glass Felt, MIL-I-16411	Insulation, Block, MIL-I-2819	Insulating Cement, MIL-C-2861	Polyimide Foam, DOD-I-24688, Type I
125 to 180				1/2
181 to 250				3/4
251 to 350	1	1-1/2	2	1
351 to 370				1-1/2
339 to 388	1-1/2	2	2-1/2	
389 to 500	2	2-1/2	3-1/2	
501 to 750	3	4	5	
751 to 850	4	5	5-1/2	
851 to 950	4-1/2	5	Not to be used	
951 to 1050	5	5-1/2	Alone for temps.	
1051 to 1200	6	6-1/2	Above 850°F	

NOTES:
1. Valves and fittings which are welded into the line are insulated permanently. Flanged valves and flanged fittings shall have reusable covers to permit servicing of take-down joints. The valves in main and auxiliary steam systems from the valve bonnet up to the packing gland shall be insulated with reusable covers. The packing gland shall remain visible.
2. Alternatively, MIL-C-20079 plus CADAFIT 1200°F or equal mineral wool insulation (with a hard fibrous glass cover) manufactured by Hamfab, Inc., Lehighton, PA may be used as applicable.
3. Re-usable covers may also be fabricated using silicone rubber aluminized fibrous glass cloth or silicone rubber coated fibrous glass cloth. NAVSEA sources of supply for silicone rubber coated or aluminized fibrous glass cloth are described in paragraph 635-2.4.3.1.b. NAVSEA sources of supply for silicone rubber coated fibrous glass cloth are described in paragraph 635-2.4.3.1.c.

NOTE

Total required thickness of insulation shall not be achieved by including loose wrap of fibrous glass felt or refractory mineral fiber blanket as part of the required thickness.

635-2.10.7 COVERS. Valves, fittings and flanges may be insulated with permanently installed removable covers. Insulating thickness shall be in accordance with Table 635-2-5. Valves and fittings that are welded into the line are insulated permanently. Flanged valves and flanged fittings shall have reusable covers to permit servicing of takedown joints. Insulate the valve stem supports on main and auxiliary steam systems from the valve bonnet up to the packing gland with reusable covers. The packing gland shall remain visible.

a. Reusable Covers for Valves and Fittings. Where the pipe insulation is terminated at flanges, provisions shall be made for removal of flange bolts or bolt studs without removing sections of insulation on adjoining piping. In order to ensure that the pipe covering will not interfere with the servicing of a takedown joint where a reusable cover is installed, the permanent insulation shall stop short of the takedown joint and a short removable and reusable section of insulation shall be installed between the permanent insulation and the takedown joint. The insulation joint formed by the permanent and reusable sections may be square, or at an angle of 45 degrees; the joint, however, shall be tight, without any gaps between the two sections and shall incorporate means to prevent dislodging the insulation sections. The pipe installation shall be stopped off squarely at a distance 1/4-inch greater than the length of the flange bolts or bolt studs as shown in Figure 635-2-5. On studded flanges, spaces shall be left on both sides of the flanged joint. Removable covers shall be fabricated so that they overlap the adjoining pipe insulation a minimum of 2 inches.

1 Construction. For sizes larger than 2-inch nominal pipe size (nps), valve bonnets and valves having takedown joints at the ends shall be fitted with reusable covers such that the bonnet joint may be removed independently of the valve covering. Valves 2-inch nps and under shall be fitted with separate covers as indicated above, or covers of a one-piece design such that they may be wrapped around the entire valve body and clipped or otherwise secured just below the packing gland or valve stem. Packing gland must remain visible.

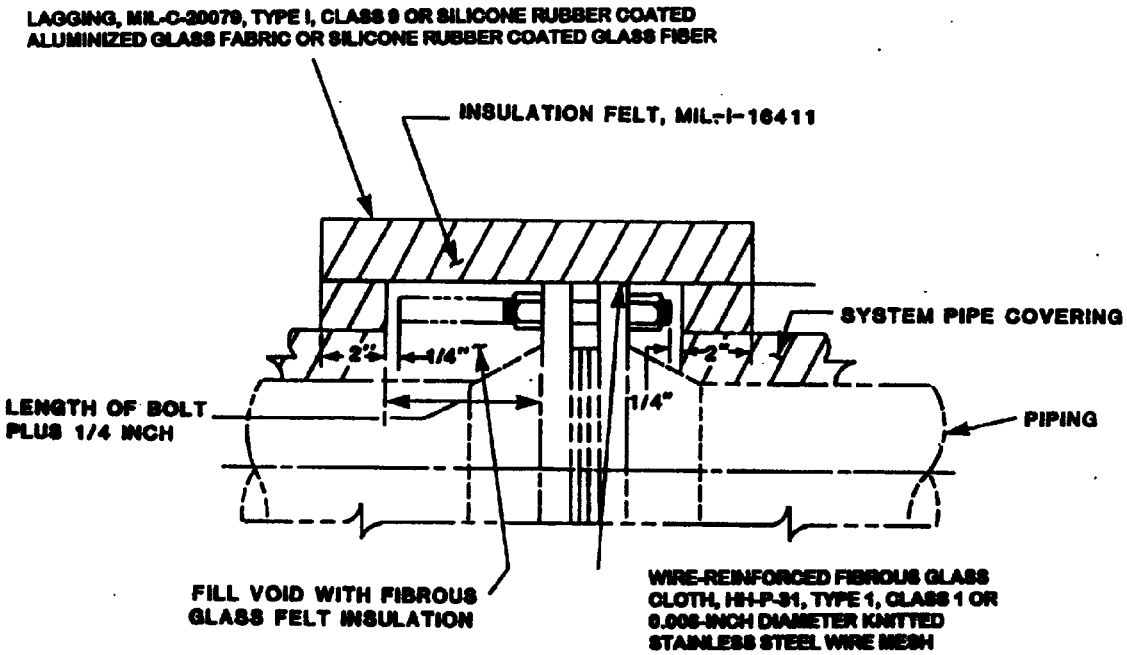

Figure 635-2-5. Typical Removable Flange Cover for System Operating at Temperatures Above 450° F

2 Flexible Covers. Covers that are exposed to temperatures under 450°F may be made in two half-sections, using fibrous glass felt in accordance with MIL-I-16411 enclosed in fibrous glass fabric conforming to MIL-C-20079, Type I, Class 9. Alternatively, silicone rubber-coated, aluminized glass fabric may be substituted for plain fibrous glass fabric for the cover material. (Approved sources for silicone rubber coated, alu-

minized glass fabric are as described in paragraph 635-2.4.3.1.b. Approved sources for silicone rubber coated fibrous glass cloth are as described in paragraph 635-2.4.3.1.c and may be substituted for plain fibrous glass fabric for the cover material). Covers that are exposed to temperatures of 450°F and over shall have an 0.008-inch diameter knitted stainless steel wire mesh sewn on to the fibrous glass cloth on the inside (hot) surface and on the ends. Knitted wire mesh shall be of 304 annealed stainless steel. The wire shall be 0.008-inch diameter. The mesh shall consist of 7-1/2 + 1/2 courses per inch equal spacing and 10 + 1 wires per inch equal spacing. The mesh shall be furnished in 30 + 1/2 inch flattened tubular form and shall be crimped 0.125 to 0.150 inch deep by 5/16 inch crimp to crimp. Alternatively, the inside surface and ends of pads may be fabricated of wire-reinforced fibrous cloth conforming to HH-P-31, Type I, Class 1. Each half cover may be sewn and quilted with polytetrafluoroethylene (PTFE) coated fibrous glass thread conforming to MIL-C-20079, Type III, Class 3, 4, or 6, for hand sewing; or PTFE-coated fibrous glass sewing thread (fully centered), Type III, Class 3, 5, or 6, for machine sewing. The covers may also be fastened by mechanical stapling with galvanized or stainless steel staples in a manner to provide uniform thickness, strength and rigidity. When the outside diameter of the fitting or flange is greater than that of the adjacent pipe covering, glass felt shall be used to build up the outer edges of the reusable cover to the required diameter. When the outside diameter of the fitting or flange is smaller than that of the adjacent pipe covering, the reusable cover may be fabricated as shown in Figure 635-2-6. The cover shall be secured by lacing wire through hook or ring fasteners.

NOTE

Preformed fibrous glass or polyimide foam, DOD-I-24688, Type I valve or fitting covers may be used when temperatures are in the 125 to 370°F range. These shall be of the same thickness as the adjacent pipe covering. Such covers, when used, shall be lagged independently of the pipe covering and in a manner which will facilitate removal and replacement.

3 Rigid Removable Covers. Rigid removable covers may be manufactured from segments of block insulation or preformed pipe insulation, having the same thickness as that on the adjacent piping. Blocks shall be securely wired to frames of 1/2-inch square mesh, number 18 gauge (0.049-inch diameter) galvanized steel wire. Wire mesh frames on the outside and inside of the blocks shall have the ends bent over and joints secured with number 18 gauge black annealed iron wire woven through the mesh. High temperature cement in accordance with MIL-C-2861 shall be troweled smoothly over all surfaces of the wire mesh. Fibrous glass felt in accordance with MIL-I-16411 may be used to build up covers when the flange diameter is larger than the outside diameter of the adjacent pipe covering. Covers shall be tightly and smoothly lagged to envelop the outside and ends, using fibrous glass cloth conforming to MIL-C-20079, Type I, Class 9. Lagging may be cemented or sewn on, except ends of covers, which shall always be sewn. Where double layer insulation is used, the two sections of the cover shall be fitted together with scarfed joints. Such joints shall be straight and true to reduce heat loss. Bands, eyelets or locks of galvanized steel, or lacing with hooks, rings, washers, and wire shall be used to secure the covers. Rigid covers constructed of preformed pipe coverings are sufficiently rigid such that wire frames are not required. They shall be lagged and secured to the valve flange or fitting in the same manner as covers constructed of rigid block materials.

NOTE

Alternatively preformed mineral wool insulation with a hard fibrous glass cover (CADAFIT 1200°F or equal manufactured by Hamfab, Inc., Leighton, PA) may be used as applicable. For thickness of CADAFIT 1200°F or equal mineral wool insulation refer to the thicknesses shown in Table 635-2-2 at the appropriate temperature range.

b. Reusable Covers For Machinery and Equipment. For reusable covers for machinery and equipment either of the following methods of fabrication is acceptable.

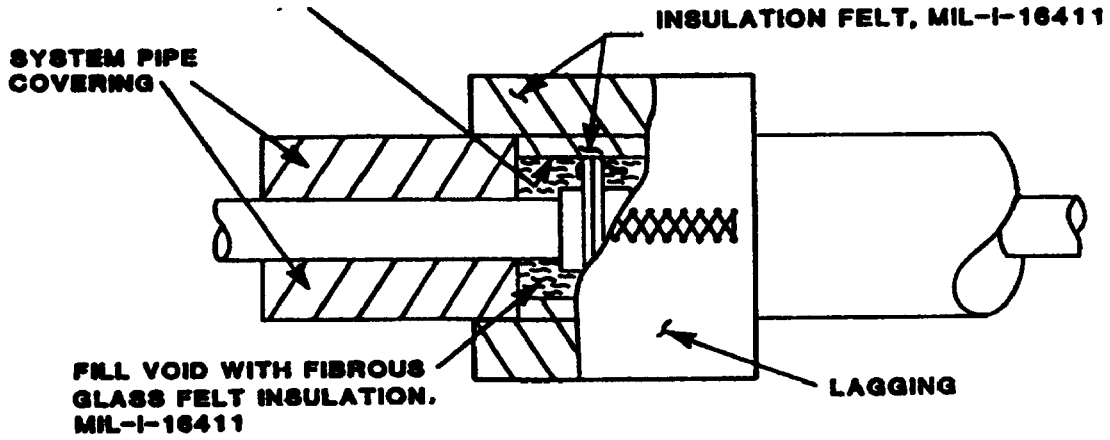

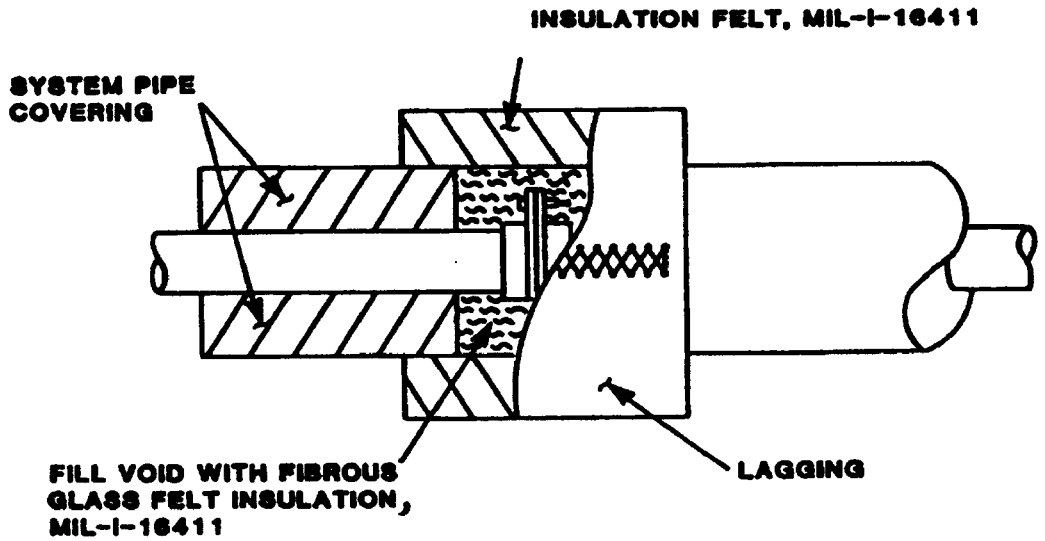

Figure 635-2-6. Removable Covers Where Flange Diameter Is Smaller Than the Outside Diameter of the Adjacent Pipe Covering

1 Covers may be similar to fibrous glass felt in accordance with MIL-I-16411 described for piping components in paragraph 635-2.10.7a.2.

2 Covers may be made in sections formed of insulating block held together with wire and adhesive cement, covered with 1/2-inch thickness of finishing cement, ASTM C 449 and lagged. Lacing with hooks, rings, washers and wire or brass snap fasteners shall be used to secure the covers.

3 Semi-removable turbine casing flange covers may be installed as an alternative for removable covers specified above. The permanent insulation shall be run to the casing flange, allowing for bolt removal space. The flange and bolts shall be covered with fibrous glass cloth in accordance with MIL-C-20079, Type I, wire inserted fibrous glass cloth in accordance with HH-P-31,Type I, Class 1, or knitted wire mesh, as required

by operating temperature, which shall be secured to the bolts with wire. The flange shall then be insulated with fibrous glass felt in accordance with MIL-I-16411, mineral wool felt in accordance with MIL-I-2818 or insulation block in accordance with MIL-I-2819, Class 2 to the required thickness and shape. The insulation is then lagged with fibrous glass cloth, which shall be carried over the outer edge of the permanent insulation and secured with adhesive. The semi-removable cover shall then be sealed with adhesive in accordance with MIL-A-3316, Class 1, and painted.

NOTE

When installing any of the foregoing covers, spaces between the removable cover and the surfaces they protect shall be filled with pieces of fibrous glass insulation felt in accordance with MIL-I-16411. The felt shall be packed loosely enough to preserve air cell structure and tightly enough to prevent air circulation.

c. Permanent Covers. Permanent covers shall be applied to those valves and fittings that are welded into the system and that would not normally require servicing, or do not have take-down joints. Valves and fittings on hot piping systems that operate at temperatures of 125°F and above may be insulated by cutting insulation felt into suitable widths and building up the thickness to within 1/2-inch of the adjacent pipe covering as shown in Figure 635-2-7. Spaces that cannot be filled with layered felt shall be filled with loose felt. The felt shall be secured in position with wire and overlaid with 1-inch square wire mesh. A 1/2-inch coating of finishing cement shall be applied, troweled to a smooth finish, and then lagged with glass cloth. Flanges shall be insulated with removable covers.

635-2.10.8 STEAM TRAPS. A removable cover consisting of two layers of glass cloth shall be installed over thermostatic steam traps and orifice assemblies.

635-2.10.9 INTERMITTENT USE BOILER PIPING SYSTEMS. Removable and reusable covers may be used as an alternative to conventional preformed block pipe insulation for systems that are subjected to periodic PMS UT measurement. Specific requirements for use of the alternate portable covers are shown below for these systems:

1. **Soot Blower Piping** - Boiler soot blower piping shall be insulated in accordance with NAVSHIPS drawing 804-841336. Details and notes implying the use of rigid sectional preformed pipe insulation have been removed from this drawing. Reusable insulation, as described in subparagraph 3 below, may be installed with TYCOM and NAVSEA 03L approval. The coverage shall be the same as with the conventional preformed insulation (i.e. not in the bilge area, on soot blower heads or on soot blower head flanged joints). When used, the covers (pads) should be installed on all piping back to and including the root valves.

2. **Blowdown Piping** - Surface blow piping, and portions of the bottom blow system that are insulated on some ship classes, may be insulated with reusable covers as described in subparagraph 3 below. TYCOM and NSWCCD-SSES 922 approval is required.

3. **Cover Construction** - Portable pads for intermittent use boiler piping shall be constructed in accordance with paragraph 635-2.10.7.a.2. requirements for fabricating reusable covers for piping components. Silicone rubber coated fibrous glass cloth shall be used for the outer and exposed end surfaces of the covers; refer to paragraph 635-2.10.7.a.2. A 1-1/2 inch thick thermal glass fiber insulating felt (MIL-I-16411) shall be used. All hot side materials shall be suitable for steam piping service (temp. 700°F). The heavy weight liner cloth (MIL-C-20079) shall have 304 SS mesh on the hot side. Pads shall be made flexible enough to follow piping

contours and permit lacing on by ship's force. Piping covers shall be segmented as required to permit installation around interferences and to be easily handled. Pads must be sequentially numbered and marked (specific location and boiler no.) for easy reinstallation.

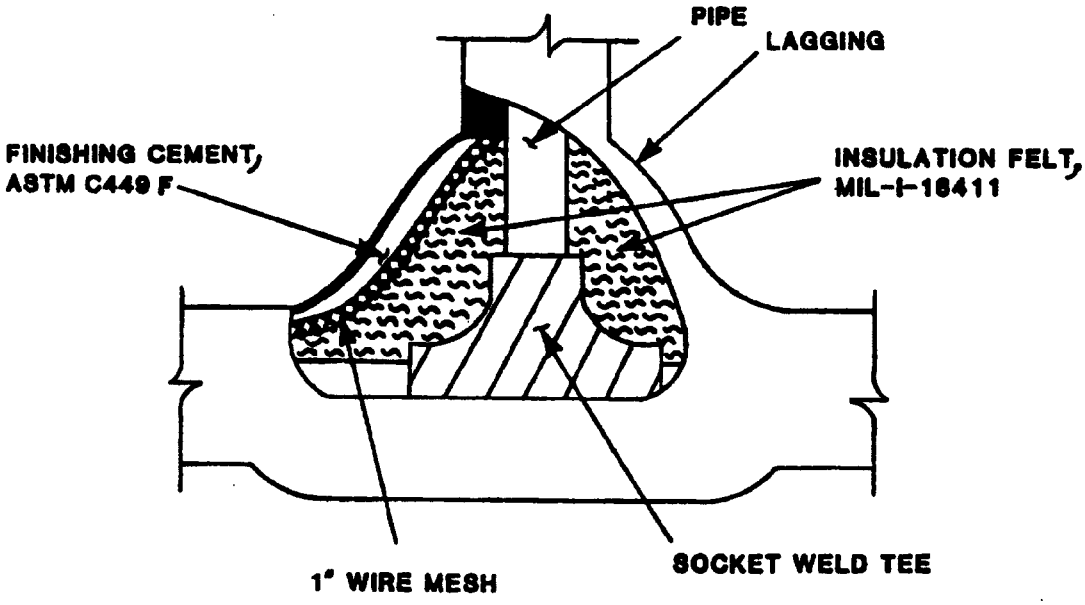

Figure 635-2-7. Permanent Insulation of Fitting on Hot Piping System Using Insulation Felt

635-2.10.10 WEATHER DECK HOT PIPING. Weather deck hot piping systems shall be insulated with preformed sectional pipe covering fabricated of calcium silicate (MIL-I-2781). Thickness shall be in accordance with Table 635-2-6.

Table 635-2-6 NOMINAL THICKNESS OF INSULATION FOR WEATHER DECK HOT PIPING

Pipe Size (inches)	Calcium Silicate, MIL-I-2781 (inches)
1/4 to 3	1-1/2
3-1/2 to	2
Over 6	2-1/2

1. Preliminary Preparation of Piping. All surfaces shall be clean, dry, and free of scale and grease. Fittings, valves, flanges, pipe supporting clamp, and at least 3 inches of adjacent pipe shall be painted as follows: Apply one coat pretreatment formula 117 in accordance with DOD-C-15328 to a maximum dry film thickness (DFT) of 0.0005 inch (0.5 mil). After this coat dries, apply two coats of aluminum paint made by mixing 2 pounds of aluminum paste in accordance with A-A-341, type II, class B, with each gallon of phenolic varnish for temperatures up to 300°F. Above 300°F, apply two coats of paint conforming to TT-P-28.

2. Pipe Covering. Calcium silicate pipe insulation shall be applied to piping with joints staggered, and with longitudinal joints at the top and bottom on horizontal pipes. The insulation shall be secured tightly with 1/2 inch wide 22-gauge galvanized steel bands or 18 gauge galvanized iron wire on 9-inch centers. Fill all joints and voids in the insulation with high temperature cement, MIL-C-2861. Wrap tightly with one layer of fibrous glass lagging cloth, MIL-C-20079, Type I, using adhesive in accordance with MIL-MIL-A-3316, Class 1. After the adhesive has dried the lagging shall be coated with two brush coats of end-sealing compound, MIL-C-22395. Where the insulation is cut off, the exposed insulation and 3 inches of exposed pipe shall be coated

with high temperature cement, 2 coats of end sealing compound, MIL-C-22395. A layer of glass cloth lagging, tailored to fit over the pipe insulation exposed surface and 3 inches of the pipe, shall be applied while the sealing compound is still tacky. The lagging shall be attached to the preformed pipe insulation with adhesive, MIL-A-3316, and to the pipe with a 1/2-inch-wide galvanized steel band. The cut-off section shall then be covered with a 3/16-inch-thick coating of end-sealing compound.

3. Preformed pipe insulation shall be trimmed to fit as closely as possible to hanger clamps. Voids shall be filled to within 1/4-inch of the surface with tightly packed fibrous glass felt. The remaining 1/4-inch space is finished by filling with end-sealing compound, generously overlapping both the support member and the adjacent insulation. Lagging is applied and coated with end-sealing compound along with the adjacent piping insulation.

4. Permanent covers for fittings, flanges, and valves are fabricated from sections of preformed pipe insulation material, bonded together with sodium silicate solution, ASTM D3400. Voids shall be filled with tightly packed fibrous glass felt. Permanent covers shall be lagged and coated in the same manner as the adjacent piping insulation.

5. Removable covers are fabricated in two halves from rigid insulation material. Each half is separately lagged and coated with end-sealing compound. Once installed, the two halves are secured with metal bands and completely covered with two coats of end-sealing compound.

635-2.10.11 DIESEL EXHAUST INSULATION. Diesel exhaust systems are insulated in the same manner as hot piping systems. Refer to MIL-STD-769 for guidance on high temperature insulation materials, thicknesses, and surface temperatures. Diesel exhaust systems on submarines may require a transmission loss treatment, in addition to thermal insulation, in order to meet specified compartment airborne noise criteria.

635-2.10.12 ANTI-SWEAT SYSTEMS (28°F to 99°F). Antisweat piping insulation shall consist of preformed sectional pipe covering, fabricated of material conforming to Electric Boat Corporation Specification 4013. Thickness shall be 3/4 inch on all pipe sizes, except in air-conditioned spaces where thickness shall be 1/2- inch. If MIL-P-15280 material is installed and requires removal or replacement, use the materials listed below.

1. ANTI-SWEAT INSULATION. Material conforming to Electric Boat Corporation Specification 4013 covering shall be split longitudinally and installed with all joints sealed using adhesive, MIL-A-24179. To assure a complete seal and avoid loss of insulation efficiency, the seams and butt joints shall be fully covered with adhesive, and the surface nearest the pipe shall be pressed together first and evenly before joining the entire surface. Tape shall not be used in place of adhesive. The tubing shall not be stretched to force longer length, as it will reduce wall thickness and insulating properties, and can cause failure of butt-joint adhesive bond. One hundred percent bonding of all joints is required in order to complete the vapor barrier integral to the material. Lagging shall be applied over the insulation where necessary to protect the insulation from damage. If the insulation is not lagged, it shall be sealed with one coat of Devoe and Raynolds DEVFLEX 601 to ensure that the insulation seams remain tight.

2. Anti-sweat piping protection that passes through joiner bulkheads or hull structures, where there is sufficient clearance, shall pass through intact (Figure 635-2-8). Where there is insufficient clearance, fit the insulation against the bulkhead or structure and seal the joint with adhesive, MIL-A-24179.

   a The bodies, flanges, and bonnets of valves on piping systems insulated with Electric Boat Corporation Specification 4013 anti-sweat insulation shall be insulated with carefully mitered and fitted pieces of foam plastic (Figure 635-2-9). Seal all joints and bond using adhesive. One-hundred percent bonding between the valve cover and the adjacent pipe covering is mandatory in order to ensure that there is a continuous vapor barrier. Lag the valve cover in the same manner as the adjacent pipe covering. Fill void areas with small pieces of Electric Boat Corporation Specification 4013 anti-sweat insulation material.

b Fittings and flanges shall be insulated with preformed pipe covering. Insulation shall be sized to match adjacent straight run piping insulation. A step-type junction with the straight run piping shall be provided when the outside diameter of the fitting or flange is smaller than the adjacent straight run piping insulation. Where the fitting or flange outside diameter is larger than the adjacent pipe covering, circumferential spacers of Electric Boat Corporation Specification 4013 anti-sweat insulation shall be used to build up to the required diameter. Void areas shall be filled with pieces of Electric Boat Corporation Specification 4013 anti-sweat insulation. All component pieces of covers fabricated from sectional Electric Boat Corporation Specification 4013 anti-sweat insulation shall be bonded together and to the adjacent pipe insulation with adhesive.

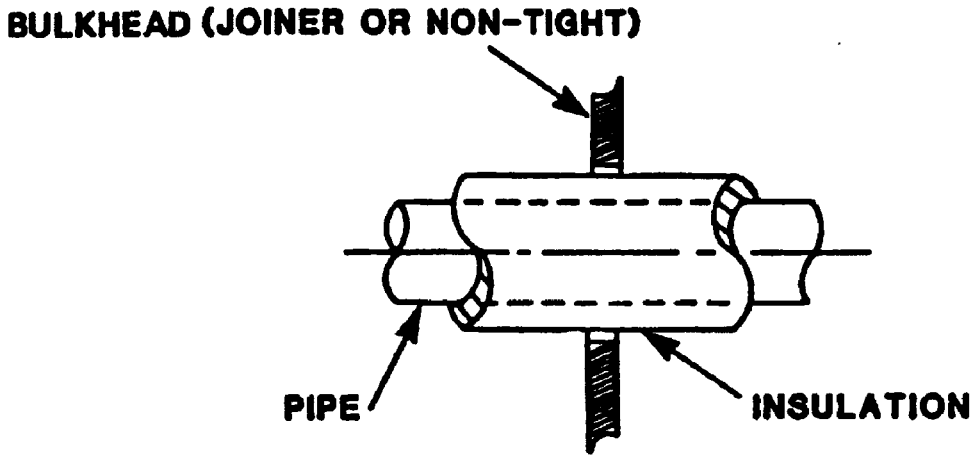

LARGE OPENING ON BULKHEAD, PERMITTING INSULATED PIPING TO PASS THROUGH INTACT

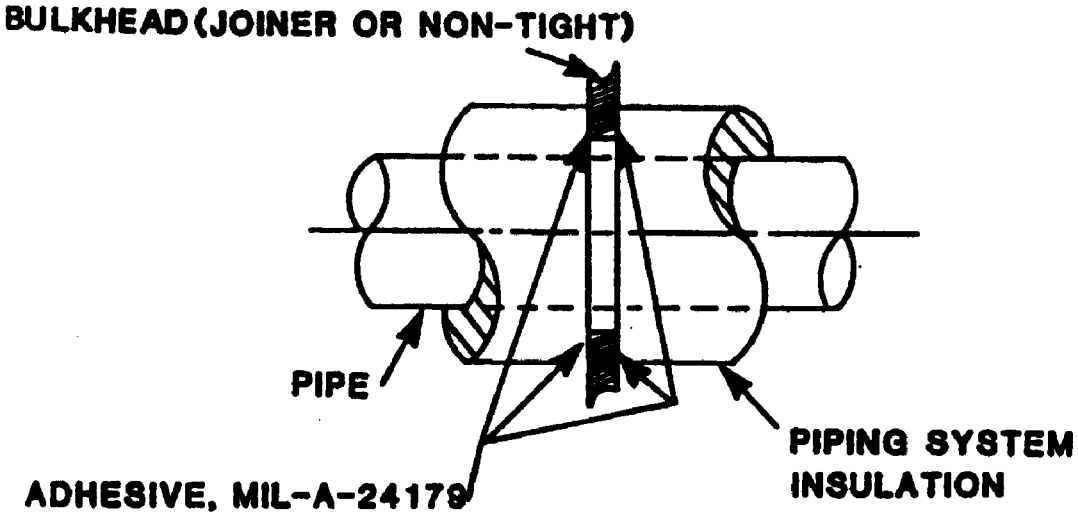

INSUFFICIENT CLEARANCE FOR INSULATED PIPING TO PASS THROUGH BULKHEAD INTACT

Figure 635-2-8. Antisweat Piping Insulation Penetrating Bulkheads

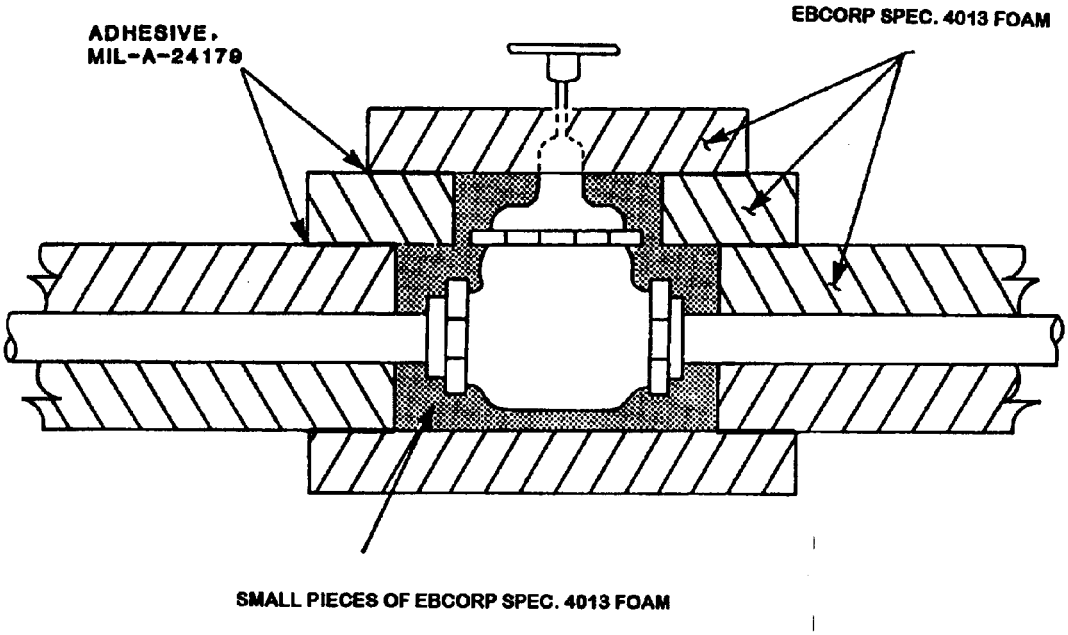

Figure 635-2-9. Typical Method of Insulating Cold Water Valve with Preformed Sectional Pipe Covering

3. When rubber block hangers are used, the insulation shall butt against the rubber block. Joints between the rubber block hanger and pipe insulation shall be sealed with sufficient adhesive, MIL-A-24179, to ensure a bond between the end of the tubing and the rubber block. When rubber-lined pipe hanger assemblies are used, the insulation shall be run up to, and fitted carefully around the clamp and hanger rod/support strap. A layer of Electric Boat Corporation Specification 4013 anti-sweat insulation shall be bonded around the pipe hanger, overlapping the pipe insulation and clamp. All joints where hanger clamps and support straps penetrate the insulation are to be sealed with adhesive, MIL-A-24179. Lagging is applied, and the hanger rod/support strap is sealed to the lagging with vapor barrier coating, MIL-C-19565, Type II.

635-2.10.13 REFRIGERANT INSULATION (-20°F to + 40°F). Piping systems handling refrigerant shall be insulated with preformed sectional pipe covering fabricated of Electric Boat Corporation Specification 4013 anti-sweat insulation. All repairs and replacement of MIL-P-15280 elastomeric foam shall be made using insulation conforming to Electric Boat Corporation Specification 4013. Thickness shall be in accordance with Table 635-2-7. When a refrigerant pipe passes through an insulated bulkhead into a refrigerated space, the piping cover shall extend into the room at least 1 inch beyond the bulkhead. Electric Boat Corporation Specification 4013 anti-sweat insulation is installed on refrigerant piping systems, including valves, fittings, and flanges, in the same manner as it is installed for antisweat treatments. The insulation shall be run up to and carefully fitted around clamp, hanger rod and support straps, and sealed with adhesive.

Table 635-2-7 THICKNESS OF ANTI-SWEAT INSULATION ELECTRIC BOAT CORPORATION SPECIFICATION 4013 FOR PIPING (NOMINAL THICKNESS (INCHES))

Pipe Size (inches)	Temperature Ranges (°F)	Non-Air Conditioned Spaces	Air-Conditioned Spaces
ALL	-20 to -1	1-1/2	1
ALL	0 to 40	1	3/4

SECTION 3.

THERMAL AND ACOUSTIC INSULATION FOR MACHINERY

635-3.1 MATERIALS

635-3.1.1 INSULATION. Approved machinery and equipment insulation materials for use onboard Navy ships are listed in MIL-STD-769. These insulation materials are available in the following forms in accordance with federal and military specifications:

a. Blankets, Felts and Sheets:
   1 Insulation blanket, thermal, fibrous mineral, MIL-I-2818
   2 Anti-Sweat and refrigerant insulation systems (sheets and tubes), Electric Boat Corporation Specification 4013, 180°F maximum. This specification covers anti-sweat and refrigerant insulation systems, replaces MIL-P-15280 elastomeric foam and is available from: Armstrong NH Armaflex manufactured by Armstrong World Industries, Inc., Marietta, PA 17547, or equal
   3 Insulation felt, thermal, glass fiber, MIL-I-16411
   4 Insulation felt, thermal and sound absorbing felt, fibrous glass, 370°F maximum, MIL-I-22023
   5 Polyimide foam, DOD-I-24688, Type I.

b. Block: Insulation block, thermal, MIL-I-2819, Classes II and III.

c. Cement:
   1 Cement, insulation, high temperature, MIL-C-2861
   2 Blended hydraulic cement, ASTM C595.

635-3.1.2 LAGGING. The efficiency and service of thermal and acoustic insulation is dependent upon its effectiveness in preventing moisture entry, mechanical abuse from personnel and machinery, and chemical damage (lube oil). Approved lagging materials for use on naval ship machinery and equipment are available in the following forms:

a. Cloth, glass; tape, textile glass; and thread, glass, MIL-C-20079.

b. Cloth glass, rewettable, see 635-2.4.3.2

c. Fibrous glass metallic cloth and tape lagging material, HH-P-31, Type I.

d. Steel sheets, carbon, zinc coated, ASTM A526, Coating designation G115.

e. Aluminum, ASTM B209, Type 6061-0.

f. Corrosion-resistant steel (CRES), ASTM A167, Type 304.

g. Flameproof and water repellent sheathing paper, UU-B-790.

h. Silicone Rubber Coated and Aluminized Fibrous Glass Cloth:
   1 Alpha lightweight 2337-2-TA, manufactured by Alpha Associates, Inc., Woodbridge, NJ 07095, or equal
   2 Alpha heavyweight 2025-2-AMA, manufactured by Alpha Associates, Inc., Woodbridge, NJ 07095, or equal.
   3 3M SRGA-0214, manufactured by Minnesota Mining & Manufacturing Co., St. Paul, MN 55144, or equal.

i. Silicone Rubber Coated Fibrous Glass Cloth:

1 Claremont Scuffcoat, manufactured by The Claremont Co., Meriden, CT 06450, or equal.

2 Alpha 8359-2-SS or equal manufactured by Alpha Associates, Inc.,Woodbridge, NJ 07095.

j. For acoustic applications, barium sulfate-loaded vinyl sheet, MIL-A-24699.

k. For acoustical transmission loss treatments (for submarines), TLT-DB, manufactured by Claremont Company, Inc., Meriden, CT 06450.

635-3.1.3 ADHESIVE. Adhesive materials comprise one type of fastening by which insulation material is attached to the surface being covered and lagging is fixed to the insulation material. Approved adhesive materials for use on ship machinery and equipment are available in the following forms:

1. Adhesive, fire-resistant, thermal insulation, MIL-A-3316.

2. Adhesive, flexible unicellular-plastic thermal insulation, MIL-A-24179

3. Adhesive, sodium silicate, ASTM D3400.

635-3.1.4 ADDITIONAL APPLICATIONS. Adhesive, MIL-A-24179, is used for securing polyimide foam insulation material, DOD-I-24688, and EBCorp Spec. 4013 material to itself and to metals. Adhesive, MIL-A-3316, is used for securing cloth lagging material to all insulation. Adhesive, ASTM D3400, is used for adhering segments of MIL-I-2781.

635-3.1.5 FINISH, COATING, SECUREMENT, AND REINFORCEMENT MATERIALS. Approved materials for use on ship equipment are of the following types:

a. Finish Cement. Insulation cement, ASTM C449, is used as a surface finish over insulation material to provide a hard, smooth finish to which lagging is applied.

b. Coating. Fire-resistant vapor-barrier coating, MIL-C-19565, Type II, which is applied with a stiff brush or a trowel over lagging on all porous antisweat, refrigerant machinery, and equipment insulation materials.

c. Securement. Insulation materials shall be supported, secured, fastened, or bonded to be held in place. Approved securement materials for use on ship machinery and equipment are available in the following forms:

1 Wire, electrical copper (uninsulated), QQ-W-343 (18-gauge) (cold-system)

2 Wire, 18-gauge minimum (0.049-inch diameter) hot-dipped galvanized iron, BWG 18, ASTM A641, Medium Temper Class 3 coating

3 Strapping, steel, and seal, QQ-S-781.

d. Reinforcement. One-inch mesh, galvanized, wire netting, 18-gauge minimum (0.049-inch diameter) is used for both reinforcement and stiffening of insulation.

635-3.2 INSULATION INSTALLATION REQUIREMENTS

635-3.2.1 PREPARATION. Surfaces of all equipment and machinery to be insulated shall be prepared in accordance with **NSTM Chapter 631, Preservation of Ships in Service (Surface Preparation and Painting)** for ships undergoing backfit or overhaul, or in accordance with individual ship specifications in the case of new construction.

635-3.2.2 GENERAL REQUIREMENTS. Insulation is installed on machinery and lagged, where required, as shown on NAVSEA drawing 804-5959212 and in accordance with the instructions below. The extent and thickness of insulation to be applied to machinery and equipment shall be as shown in Table 635-3-1, Table 635-3-2, and Table 635-3-3. Where methods of application require cloth lagging, MIL-C-20079, to be secured to the insulation with adhesive, the intent is to completely adhere the cloth to the entire outer surface of the insulation or finishing cement and to seal the cloth surface with adhesive. All lagging shall be fitted securely, lapping all joints by at least 2 inches, and shall present a smooth appearance. Unless specifically exempted by ship specifications, cloth and tape lagging shall be covered with one coat of fire-retardant paint, DOD-E-24607, after installation. The inside surface of removable covers shall not be painted. Where fasteners are necessary, they shall be attached during manufacture (before heat treatment, stress relief, and testing) by a NAVSEA approved procedure. Welding of fasteners, clips, or hooks to machinery, pressure vessels, or other related equipment after their construction is prohibited, unless specifically authorized by NAVSEA.

635-3.2.3 EQUIPMENT SUPPORTS. Units of equipment with design internal temperatures of 300°F and over shall be insulated from their supports, or the supports insulated from the structure to which they are attached, where the heat transmitted may be objectionable on the other side of the structure.

635-3.2.4 INSPECTION AND MAINTENANCE. Requirements for the inspection, detection of heat loss, and corrective measures are contained in paragraph 635-2.8 through paragraph 635-2.9.

635-3.3 INSTALLATION OF THERMAL INSULATION FOR MACHINERY

635-3.3.1 THERMAL INSULATION TO TURBINES APPLICATION

635-3.3.1.1 Permanent Insulation Application. All surfaces that have an operating temperature of 125°F or greater shall be insulated. Surfaces that can be permanently insulated may be insulated with thermal block insulation, MIL-I-2819, high temperature cement, MIL-C-2861, glass insulation felt, MIL-I-16411, or mineral wool blanket, MIL-I-2818. Thickness of insulation material shall be as shown in Table 635-3-1. The insulation shall be applied by one of the following methods:

1. Block Application. Before applying block insulation, MIL-I-2819, all irregularities of the turbine surface shall be filled with high temperature cement or insulation felt to form a smooth surface. Block insulation shall then be carefully fitted to the turbine surface with all joints staggered and tightly butted. When two or more layers of block are used, the joints of the adjacent layer shall be staggered. Cement or felt insulation shall be used to point up joints and crevices between the layers of block. Block insulation shall be held in place with 18-gauge, galvanized, hot-dipped iron wire spaced on 3-inch maximum centers, or strapping spaced on 9-inch maximum centers. Restraining wire shall be attached to manufacturer-installed clips or hooks. One-inch wire mesh netting shall be spread over the outer layer of block and secured with 18-gauge, galvanized, hot-dipped iron wire to restraining wire or strapping. A 1/2-inch layer of MIL-C-2861 high temperature cement tempered with hydraulic ASTM C595 cement (4 parts high temperature cement to 1 part hydraulic cement), or finishing cement shall be applied over the mesh netting to a smooth finish. After drying for 1 hour, adhesive shall be applied to the hard cement finish and allowed to dry for 1 hour. It shall then be lagged with fibrous glass cloth, MIL-C-20079, Type 1 (Figure 635-3-1). Brass or galvanized steel hooks, rings, or snap fasteners shall be attached to the permanent insulation adjacent to removable turbine casing flange joint covers (paragraph 635-3.3.1.2).
2. High Temperature Cement. High temperature cement may be used to form the complete permanent insulation. When used, it should be applied in layers 1/2- to 1-inch thick. Each layer shall be permitted to thoroughly dry

before a succeeding layer is applied. One-inch wire mesh netting shall be applied between layers and spread over the outermost layer. A 1/2-inch layer of finishing cement shall be applied over the mesh netting to a smooth finish. Apply adhesive, glass cloth lagging, and fasteners as described in subparagraph 1 (Figure 635-3-2).

Table 635-3-1 THICKNESS OF INSULATION MATERIALS FOR HOT SURFACES OF MACHINERY AND EQUIPMENT (NOMINAL THICKNESS (INCHES) (DOES NOT INCLUDE FINISHING CEMENT))

Maximum Operating Temperature (°F)	MIL-I-16411	MIL-I-2819	MIL-I-2818	MIL-C-2861	DOD-I-24688, Type I
125 to 180					1/2
181 to 350					1
125 to 338	1	1-1/2	1-1/2	2	
351 to 370					1-1/2
339 to 388	1-1/2	2	2	2-1/2	
389 to 500	2	2-1/2	2-1/2	3-1/2	
501 to 750	3	4	4	5	
751 to 850	4	5	5	5-1/2	
851 to 950	4-1/2	5	5	Not to be used alone for temp. above 850°F	
951 to 1050	5	5-1/2	5-1/2 (1000°F max)		
1051 to 1200	6	6-1/2			

Table 635-3-2 THICKNESS OF ANTISWEAT INSULATION MATERIALS FOR MACHINERY AND EQUIPMENT (NOMINAL THICKNESS (INCHES) (DOES NOT INCLUDE VAPOR BARRIER))

Temperature Range Temperature (°F)	Military Specification	Non-Air- Conditioned Spaces	Air-Conditioned Spaces
28 to 29	Anti-sweat InsulationElectric Boat Corporation Specification 4013	3/4	1/2
	MIL-I-22023 Type I, Class 6	1	1/2
NOTE: In some cases, MIL-I-22023, Type I, Class 6 is used as an anti-sweat insulation for submarine tank tops.			

Table 635-3-3 THICKNESS OF REFRIGERANT INSULATION FOR MACHINERY AND EQUIPMENT (NOMINAL THICKNESS (INCHES))

Temperature RangeTemperature (°F)	Military Specification	Non-Air-Conditioned Spaces	Air-Conditioned Spaces
- 20 to 40	Anti-sweat InsulationElectric Boat Corporation Specification 4013	2	1

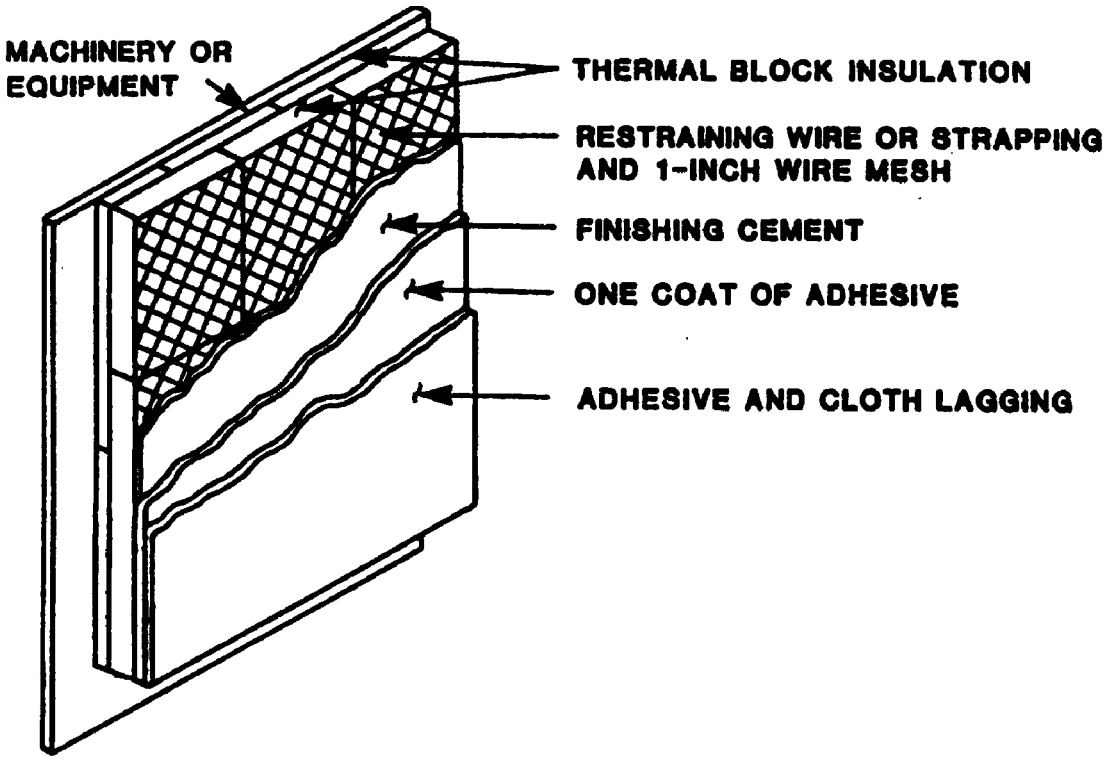

Figure 635-3-1. Application of Thermal Insulation Block, MIL-I-2819, Class 2, to Machinery and Equipment (Temperature Range 125°F to 1,200°F)

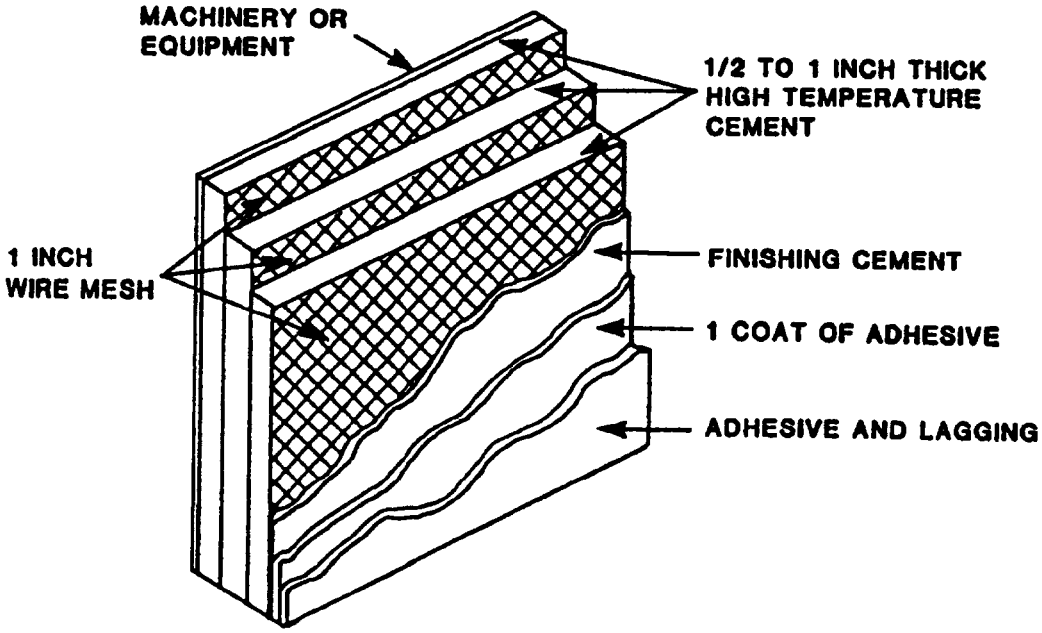

Figure 635-3-2. Application of High Temperature Cement, MIL-C-2861, to Machinery and Equipment (Temperature Range 125° F to 850° F)

3. Fibrous Glass Felt and Mineral Fiber Blanket Insulation. Fibrous glass felt and mineral fiber blanket insula-

tion may be used to form the complete permanent insulation. When used, these insulations will be applied in layers to make up the required thickness. Joints will be staggered and tightly butted. When two or more layers are used, joints of the adjacent layers shall be staggered. Adjacent layers maybe held to one another with adhesive. Insulation shall be firmly held in place with 18-gauge, galvanized, hot-dipped iron wire spaced on approximately 3-inch centers, or strapping spaced on 9-inch maximum centers. Fasten retaining wires to manufactured insulation clips or hooks where applicable. Apply wire mesh netting, cement, adhesive, glass cloth lagging, and fasteners as described in subparagraph 1 (Figure 635-3-3 and Figure 635-3-4).

635-3.3.1.2 Removable Turbine Casing Flange Joint Cover. Removable covers are used for the flange joint between the upper and lower turbine casings. Covers are formed by quilting layers of insulation felt, MIL-I-16411, together with PTFE-coated glass yarn for hand sewing, or coated fibrous glass sewing thread for machine sewing. The turbine side and end surfaces of the flange cover, for service of 450°F and above, shall be covered with wire-reinforced glass cloth, HH-P-31, Type 1, Class 1 or knitted wire mesh. The outer surface shall be covered with glass cloth, MIL-C-20079, Type I, Class 9. Flange covers for temperatures under 450°F shall be enclosed with glass cloth, MIL-C-20079, Type I, Class 9, on both the inside and outside. Alternatively, silicone rubber coated and aluminized glass fabric or silicone rubber coated glass fabric may be substituted for plain fibrous glass cloth as the cover material (Figure 635-3-5).

635-3.3.1.3 Semi-Removable Turbine Flange Cover. Semi-removable turbine flange covers may be installed as an alternative for removable flange covers. The permanent insulation material is run up to the turbine casing flange allowing bolt removal space. The flange and bolts shall be covered with glass cloth, wire-reinforced glass cloth, or knitted wire mesh, as required by operating temperature, and secured to the flange bolts with 18-gauge, galvanized wire. The flange is then insulated with glass block, felt, or blanket thermal insulation material and lagged with glass cloth. The cloth lagging shall be carried at least 4 inches over the outer edge of the permanent insulation. The semi-removable cover installation shall be sealed by applying a coat of adhesive, MIL-A-3316, Class 1, and painted.

635-3.4 INSTALLATION OF THERMAL INSULATION TO BOILER COMPONENTS APPLICATION

635-3.4.1 BOILER CASINGS

1. Insulation block, MIL-I-2819, shall be fitted to the outer boiler casing using adhesive, MIL-A-3316, and secured with 18-gauge wire netting, laced to welded notched studs on the outer boiler casing. Voids and gaps in the insulation block shall be filled with cement, MIL-C-2861, or insulation felt, MIL-I-16411. One-inch wire mesh netting shall be applied over the insulation block and attached with wire. Finishing cement shall be used to smooth surfaces and completely cover the netting to a thickness of 1/2-inch. After drying, the hard cement finish shall be lagged with fibrous glass cloth, MIL-C-20079, Type I.
2. Before installation of the insulation block, 1/4-inch-diameter round bars, ASTM A108, Grades 1008-1025, are spaced approximately 18-inches apart and tack welded to the boiler outer-casing. Tack welds shall be located approximately 12-inches apart. Expanded metal, MIL-M-17194, is then tack welded to the round bar. Tack welds shall be approximately 6-inches apart. Block insulation shall be fitted to the expanded metal using adhesive, MIL-A-3316, and secured with wire. Voids and gaps in the insulation block shall be filled with cement, MIL-C-2861, or insulation felt, MIL-I-16411. One-inch wire mesh shall be applied over the insulation block and attached with wire. A 1/2-inch-thick layer of finishing cement shall be applied over the wire mesh to a smooth finish. After drying, the hard cement finish shall be lagged with fibrous glass cloth, MIL-C-20079, Type I.
3. Upper casing insulation that is exposed to moisture, which causes the lagging cloth and cement to separate

from the underlayer of block, can be reinforced. Use longer studs at selected locations that will protrude through the lagging cloth. Mechanically anchor the cloth in place at these locations by use of an oversize washer and nut.

4. Boiler bottom casing insulation shall be reinforced with expanded metal to prevent the insulation from sagging. Weld 1/2-inch diameter threaded studs to the casing on 24″ x 30″ centers prior to applying insulation and lagging. Fasten 1″ x #6 expanded metal against the insulation and lagging using nuts and washers.

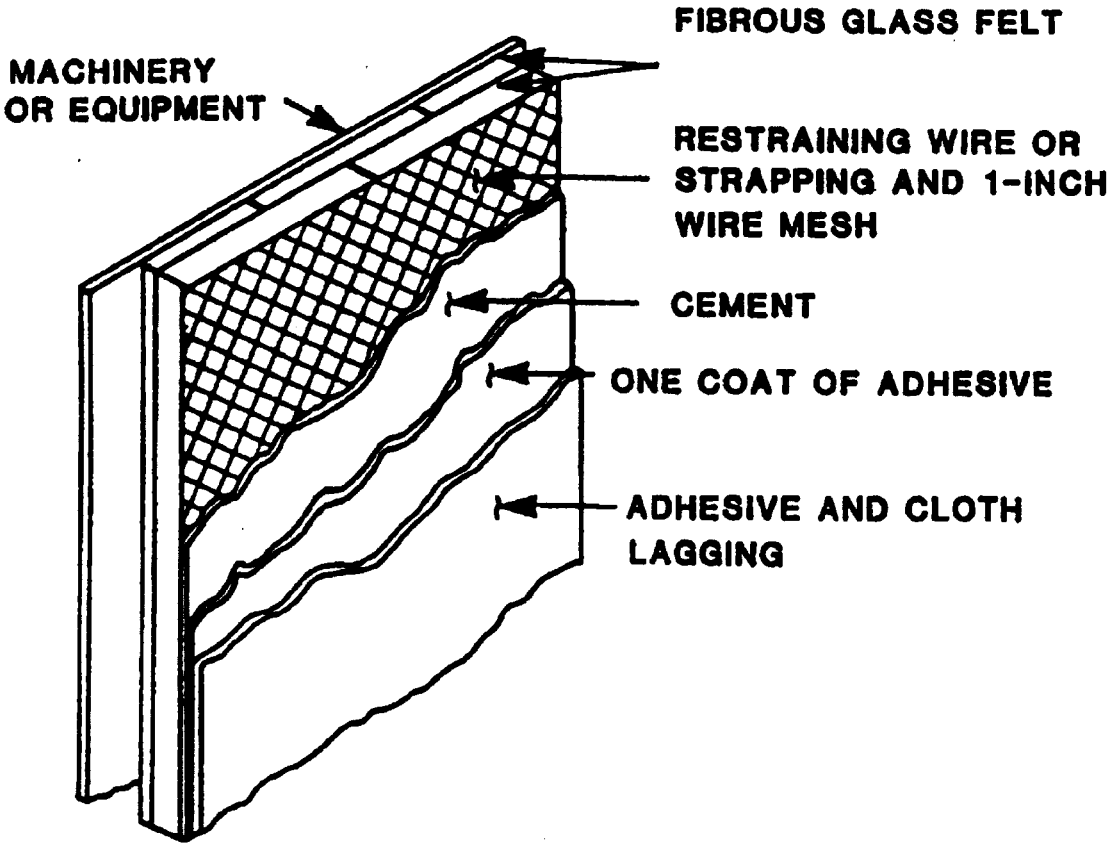

Figure 635-3-3. Application of Fibrous Glass Felt, MIL-I-16411, to Machinery and Equipment (Temperature Range 125° F to 1,200° F)

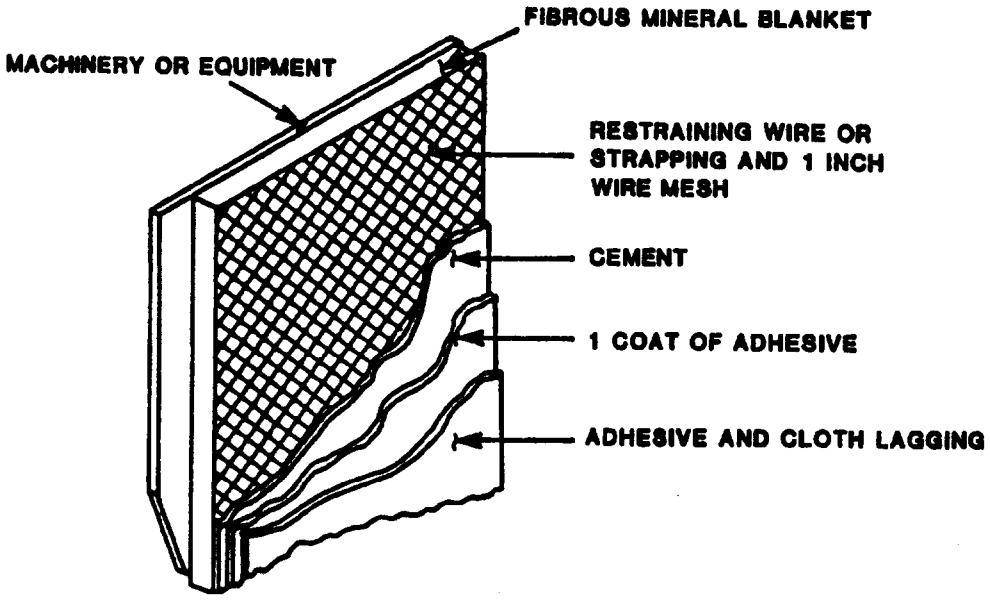

Figure 635-3-4. Application of Fibrous Mineral Blanket, MIL-I-2818, to Machinery or Equipment (Temperature Range 125°F to 1,000°F

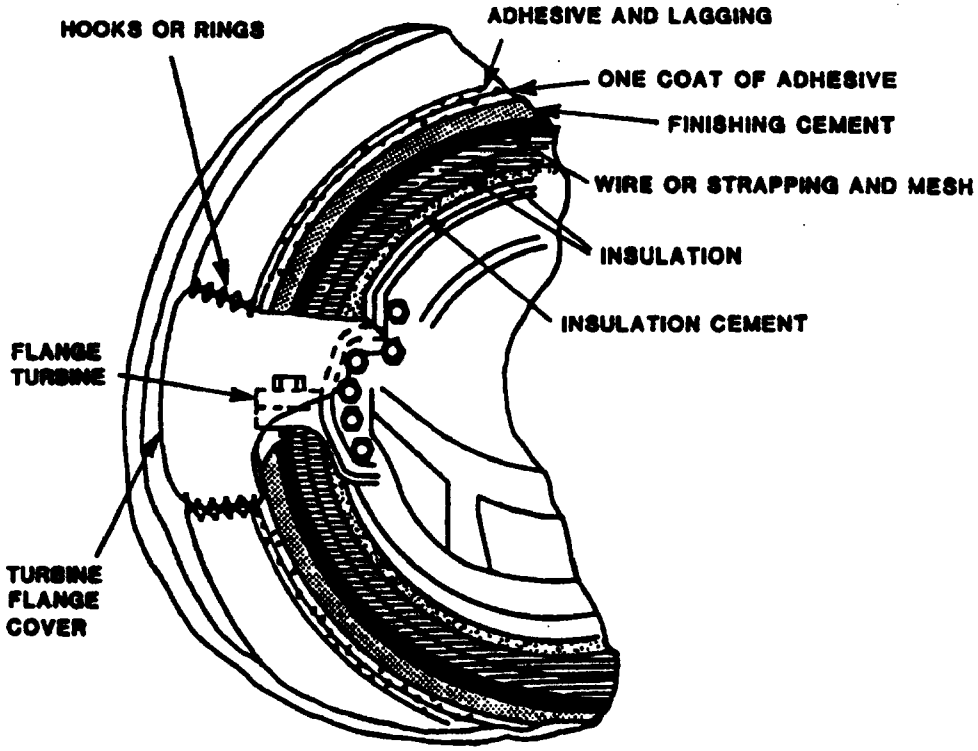

Figure 635-3-5. Turbine Casing Removable Flange Cover

5. If it is deemed necessary to replace asbestos mill board located on the inside of the outer casings of boilers, the recommended replacement material is Sproule WR-1200 thermal insulation or equal which is composed of a fine grade perlite and sodium silicate binder. An approved source of this material is: Sproule Manufac-

turing Co., Inc., P.O. Box 15, 15 Phoenixville Pike, Devault, PA 19432. This material can be installed essentially in the same manner as asbestos mill board. The standard size suitable for windbow areas is 1-inch thick by 12-inch by 36-inch sections. Sections of perlite should be installed over existing fasteners. A light gauge metal sheathing shall be installed over the perlite block to retain it in position and protect it from erosion. Asbestos millboard can also be encapsulated in place; refer to **NSTM Chapter 221, Boilers** .

635-3.4.2 Boiler Steam Drums and Water Drums. Steam and water drum shells shall be insulated with block, felt, or blanket thermal insulation. The block installation, shown on Figure 635-3-6, is preferred in upper drum areas where workers normally stand on insulation to gain access to safety valves or other components. On boiler drums, galvanized wire is commonly used in place of 360 degrees straps shown in Figure 635-3-6. The wire is run between washers that are tack welded to the casing attachment bars. When wire is used the maximum spacing between bands should be decreased.

635-3.4.3 Drum Ends. Drum ends shall be insulated with insulation felt, block, or high temperature cement. The insulation shall be applied by one of the following methods:

1. Insulation felt shall be installed and lagged as described in paragraph 635-3.3.1.1.

2. Insulation block shall be installed and lagged as described in paragraph 635-3.3.1.1.

3. High temperature cement shall be applied in layers between 1/2- and 1-inch thick. Each layer shall be reinforced with 1-inch wire mesh and allowed to set for 24 hours, or until dry. The finished installation work shall be lagged with glass cloth.

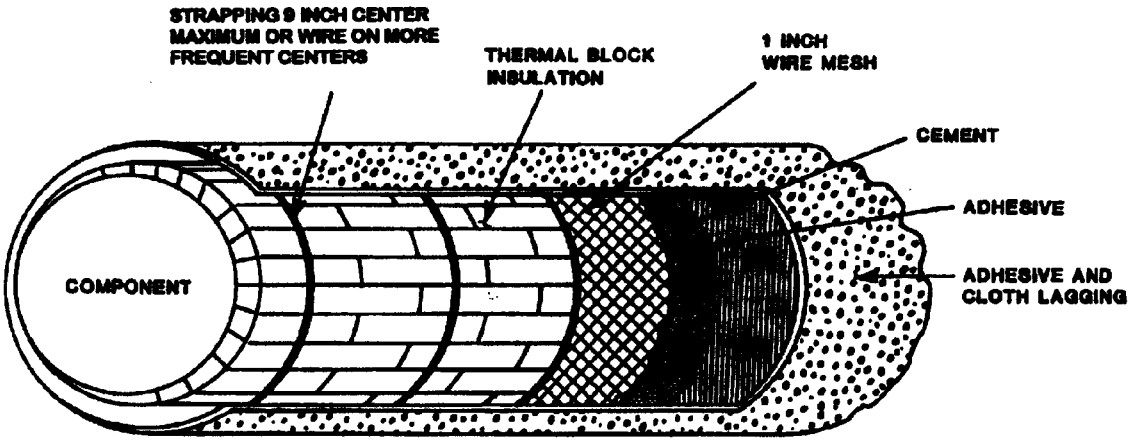

Figure 635-3-6. Typical Drum Shell Insulation

635-3.4.4 MANHOLE COVERS. Drum manhole plates shall be insulated with a removable cover (Figure 635-3-7). The removable cover shall be formed, cloth lagged, and attached to the permanent drum end insulation using the method described in paragraph 635-3.3.1.2 for removable turbine flange covers.

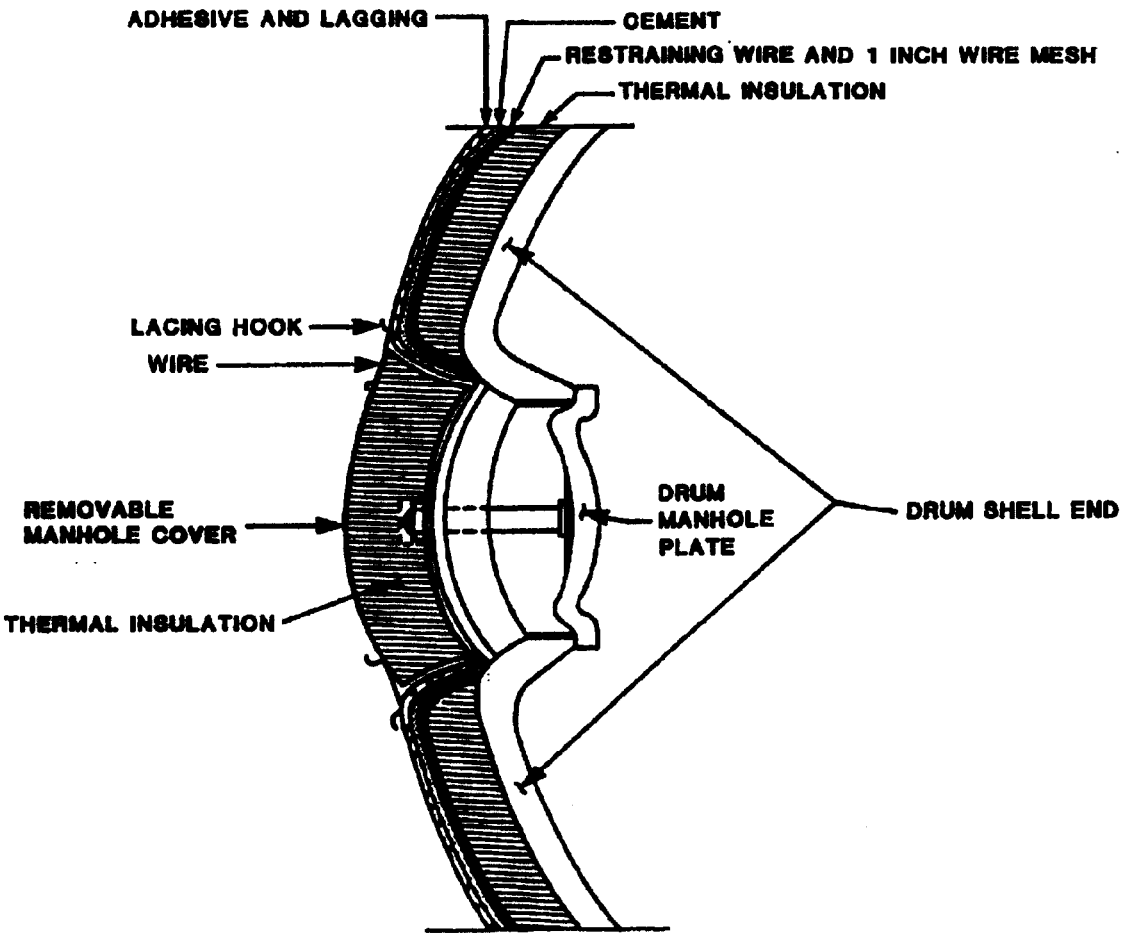

Figure 635-3-7. Drum Shell Manhole Plate and Removable Cover

635-3.4.5 SUPERHEATER HEADERS. Superheater headers shall be insulated with custom-made blankets. These blankets shall be constructed using the method described in paragraph 635-3.3.1.2. The blankets shall be held in place with 18-gauge, galvanized iron wire, laced through hooks or rings attached to the blanket and studs welded to the superheater support plate.

635-3.4.6 BOILER UPTAKE AND BREECHING. Boiler uptakes and breechings may be insulated with fibrous mineral insulation blanket, MIL-I-2818, or insulation felt, MIL-I-16411. The insulation thickness shall conform to Table 635-3-1, as applicable, unless otherwise specified. If acoustic absorptive treatment is found necessary to decrease the noise level, the acoustic treatment shall be added to the thermal treatment. The insulation shall be applied to the uptake or breeching with pieces butted closely together. It may be secured with 18-gauge, galvanized iron wire or by impaling it on the studs used to support the metal lagging. Galvanized steel washers may be placed on the studs to hold the insulation in place until the lagging is installed. Metal lagging for uptakes and breechings shall be galvanized sheet metal, ASTM A526 Coating Designation G 115, not less than 1/32-inch thick. Insulation and lagging are not required on uptakes and breechings above the weather deck, except where the transfer of heat to spaces adjacent to the uptake area would be objectionable.

635-3.5 THERMAL INSULATION TO LOW PRESSURE DISTILLING PLANT APPLICATION

635-3.5.1 HOT COMPONENTS. The evaporator shells and feed heaters, and air ejector condensers shall be permanently insulated with insulation felt, MIL-I-16411, or block, MIL-I-12819, held in place with 18-gauge wire, spaced on approximately 3-inch centers, covered with a 1/2-inch layer of cement, and allowed to dry. The insulation shall then be lagged with glass cloth.

635-3.5.2 REMOVABLE COVERS. The air ejectors, feed heater hotwell drain regulator, and feed heater waterbox flanges shall be covered with removable covers. These covers shall be constructed using the method described in paragraph 635-3.3.1.2. The removable covers shall be attached to galvanized sheet steel covers templated and sectioned to suit the installation. Sections shall be held together and to the evaporator with 1/4-inch machine screws or self-tapping screws. The covers shall be secured to the metallic lagging with 18-gauge wire laced through rings or hooks attached to the cloth covers and hooks welded to the metallic lagging.

635-3.5.3 DISTILLATE COOLER AND STAGE CONDENSERS. The distillate cooler and stage condenser waterboxes shall be covered with insulation Electric Boat Corporation Specification 4013. Insulation felt, MIL-I-22023, or MIL-I-16411, shall be applied and held in place with 18-gauge copper wire and covered with a 1/2-inch layer of cement. The cement shall be covered with a layer of water repellent and flameproof sheathing paper, UU-B-790, and secured with masking tape. All joints of the paper shall be lagged and sealed with adhesive. The insulation shall be lagged with glass cloth. When the adhesive has dried, the surface shall be completely covered with vapor-barrier compound, MIL-C-19565, Type II. Anti-sweat insulation Electric Boat Corporation Specification 4013, shall be applied, lagged, and painted using the method described in paragraph 635-3.8.1, where MIL-P-15280 elastomeric foam requires repair or replacement, insulation conforming to Electric Boat Corporation Specification 4013 shall be used.

635-3.6 THERMAL INSULATION TO AUXILIARY MACHINERY, PUMPS, AND EQUIPMENT WITH TEMPERATURES ABOVE 125°F APPLICATION

635-3.6.1 PERMANENT INSULATION. Auxiliary machinery, pumps, and equipment shall be permanently insulated where practical, with thermal block, felt, or blanket insulation materials of the required thickness. The insulation material shall be secured with 18-gauge, galvanized iron wire and covered with 1-inch wire netting. Cement or felt insulation shall be used to fill crevices and completely cover the wire netting to a 1/2-inch thickness. The surface shall then be smoothed using finishing cement. Lagging shall be applied to the hard cement finish. A final coating of adhesive shall be applied to the smooth lagged surface, soaking the lagging completely over the entire surface.

635-3.6.2 REUSABLE INSULATION. For units of machinery or equipment such as small pumps, where it would be impractical to install permanent insulation, the entire insulation may be made removable. The removable cover shall be constructed using the method described in paragraph 635-3.3.1.2.

635-3.7 THERMAL INSULATION TO UNFIRED PRESSURE VESSELS APPLICATION

635-3.7.1 PERMANENT INSULATION. Unfired pressure vessels, including catapult wet accumulators, shall be insulated with thermal block insulation, MIL-I-2819, or fibrous glass felt, MIL-I-16411. Insulation shall be held in place with 18-gauge, galvanized iron wire spaced on approximately 3-inch centers, or strapping spaced on 9-inch maximum centers. Insulation shall be covered with a 1/2-inch layer of finishing cement, ASTM C449, and lagged with glass cloth.

635-3.7.2 REUSABLE COVERS. Removable and reusable covers shall be installed over butt-welded shell inserts where periodic radiographic inspection of the joint is required. These covers shall be constructed, lagged, and attached using the same method described in paragraph 635-3.3.1.2. Covers shall extend at least 4 inches beyond the weld joint.

635-3.7.3 GAS TURBINE EXHAUST DUCT INSULATION. The exhaust duct systems of FFG 7 class ships are externally insulated, while those of CG 47, DD 963, DDG 993, and DDG 51 class ships are internally insulated. All insulation is installed in accordance with the ship's detailed specifications; when repairs are required, refer to those ship specifications for specific repair details. General requirements are as follows:

1. Externally insulated gas turbine exhaust ducts: The exhaust duct is covered from its lower termination adjacent to the turbine exhaust flange coupling up to the 02 deck level with a 6-inch thickness of fibrous glass insulation conforming to MIL-I-16411. Four inches of MIL-I-16411 insulation is installed from the 02 deck line to the top of the stack, and all insulation is protected with a 1/6-inch thick steel system.
2. Internally insulated gas turbine exhaust ducts: Prior to installation of insulation, all cavities (including corners), must be completely filled with small pieces of insulation to a firm consistency, with precautions taken to avoid the formation of voids. Insulation consists of a layer of mineral wool (minimum density not less than 8 lbs/ft^3) conforming to MIL-I-2818, with a 4-inch thickness between stiffeners and a glass cloth liner encased in a CRES wire mesh screen. The entire insulated area and stiffeners are wrapped with additional layers of insulation to meet the ships specific thermal and acoustic requirements, and the insulation is protected on the gas flow side by a perforated metal plate. This insulation treatment is designed to meet Grade A shock requirements.

NOTE

Present ship specifications allow a waiver for the vibration requirement for the current issue of MIL-I-2818.

3. Removable insulation pads are installed over the bolting area of access covers for exhaust ducts. The inside surface of the pads is lagged with Inconel mesh and the outside surface with fibrous glass cloth. Refer to MIL-STD-769 for insulated thickness requirements according to temperature. See paragraph 635-2.10.7 for details concerning the construction of removable covers.
4. Ceramic (refractory) fiber insulation, MIL-I-23128 material shall not be used for insulating gas turbine exhaust ducts.

635-3.8 COLD WATER ANTI-SWEAT INSULATION (28°F TO 99°F)

635-3.8.1 INSULATION APPLICATION. Machinery and equipment shall be permanently insulated with felt, MIL-I-22023, Class 6, or anti-sweat insulation Electric Boat Corporation Specification 4013. MIL-P-15280 may have been used in the past. If that material requires repair or replacement, use either felt or antisweat insulation listed above. Thickness of insulation material shall be as shown in Table 635-3-2. The insulation shall be applied using one of the following methods:

1. Insulation felt shall be applied to the machinery or equipment, held in place with wire, and covered with a 1/2-inch layer of cement. The cement shall be covered with one layer of water repellent and fire-resistant paper, UU-B-790, secured with masking tape. All joints of the paper shall be lapped and sealed with adhesive, MIL-A-3316. The insulation shall be lagged with glass cloth. The lagged surface shall be completely covered with one coat of vapor barrier compound, MIL-C-19565, Type II (Figure 635-3-8).
2. Anti-sweat Insulation. Electric Boat Corporation Specification 4013 material shall be attached using Adhesive shall be allowed to become dry to the touch (3 to 10 minutes) before joining the surfaces. To ensure a complete seal and avoid loss of efficiency, all seams and butt-joints shall be fully covered with adhesive. Tape shall not be used in place of adhesive. The anti-sweat insulation material shall not be stretched to force longer

length, as it will reduce wall thickness and insulation properties, and can cause failure of the butt-joint adhesive bond. Cloth lagging shall be applied where necessary to protect the insulation from damage (Figure 635-3-9)

3. For installations where acoustic noise transmission loss is required, insulation felt or polyimide foam shall be applied to the machinery or equipment. Barium sulfate-loaded vinyl sheet shall then be applied over the felt or foam. Spans between adjacent sections of loaded vinyl are to overlap a minimum of 3 inches. All seams in each layer of the treatment are to be sealed with duct tape. All penetrations of the treatment shall be sealed with sealing compound TT-S-1543.

635-3.8.2 REFRIGERANT INSULATION (-20°F TO 40°F). Machinery and equipment shall be insulated with anti-sweat insulation Electric Boat Corporation Specification 4013 to the thickness shown in Table 635-3-3. It shall be installed and lagged or painted using the same method as for Electric Boat Corporation Specification 4013 anti-sweat insulation described in 635-3.8.1.

635-3.8.3 O_2 N_2 PLANT. Liquid oxygen and liquid nitrogen plants shall be insulated with multiple wrap layers of fibrous glass insulation felt, MIL-I-16411 and aluminum foil to a total thickness of a least 4 inches. The insulation is then lagged with fibrous glass cloth, MIL-C-20079, Type I. One coat of vapor barrier, MIL-C-19565, Type II, is applied over the glass cloth and when dry, covered with one coat of fire-retardant paint, DOD-E-24607. The insulation shall be tightly packed in, around, and between system components, piping, and plant outer casing, so that it will prevent air or moisture intrusion, concentration, and subsequent freezing of system components.

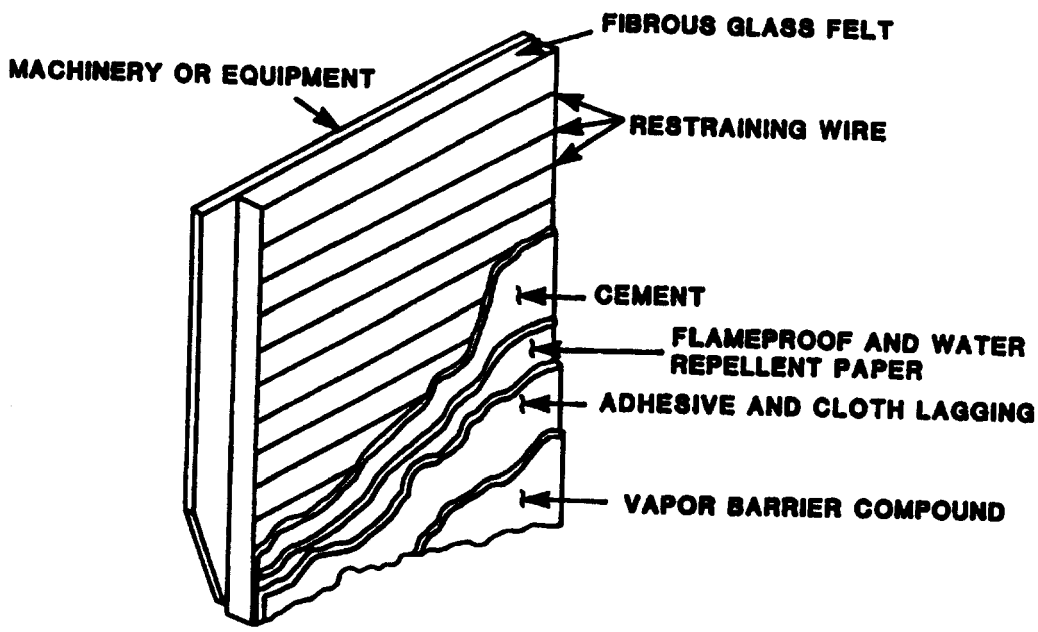

Figure 635-3-8. Application of Insulation Felt, MIL-I-22023, to Machinery and Equipment (Temperature Range 28°F to 99°F)

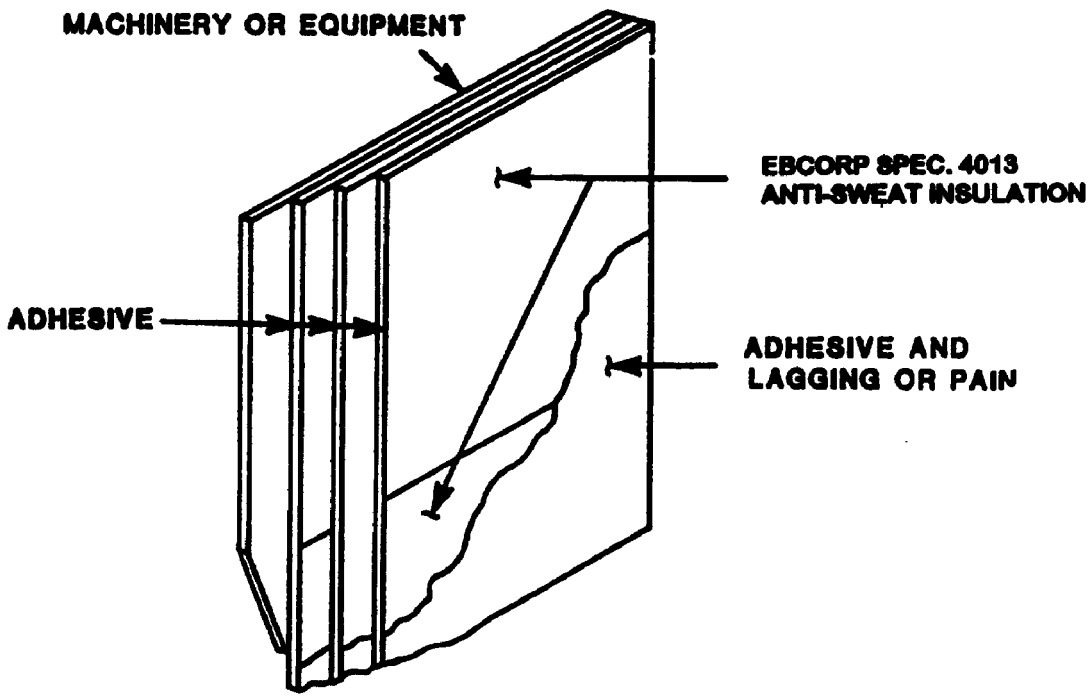

Figure 635-3-9. Typical Installation of Anti-Sweat Insulation EBCorp Spec. 4013, on Machinery and Equipment (Temperature Range -20° to 180°F)

SECTION 4.

REFRIGERATED STORES SPACES

635-4.1 GENERAL

635-4.1.1 APPLICATIONS. The refrigerated stores spaces are insulated so that they may be maintained at the low temperatures required for proper preservation of the perishable foods carried. On nearly all ships, built-in refrigerated stores spaces (as distinguished from reach-in refrigerators used in ship pantries and galleys) are provided, although the number and size of the individual spaces vary from ship to ship. Typical refrigerated stores spaces are 33°F chill rooms, 0°F freeze rooms, and multipurpose 0°F to 33°F spaces that can be used for either chill or freeze rooms. In some cases, refrigerated stores space vestibules are used as thaw spaces and are insulated in accordance with the requirements for refrigerated stores spaces. Generally, walk-in or thaw refrigerators are installed in the galley or butcher shop.

635-4.1.2 MATERIALS. Several types of construction may be used for refrigerated spaces. Typical constructions involve the use of fibrous glass, mineral wool, or polyurethane foam insulations covered with a sheathing of wood, hardcore marine veneer, or metal or fibrous-glass-reinforced fire-resistant resin laminate. Mineral wool and fibrous glass insulations are no longer used, but may be found on some older ships. Polystyrene foam insulation is prohibited. Fiberglass-reinforced resin, core marine veneer sheathing will no longer be specified in future ship specifications.

635-4.1.3 INSULATION. Insulating material currently used in the construction of new naval shipboard refrigerated spaces is polyurethane foam, MIL-I-24172, either Type I (preformed) or Type II (foamed-in-place). Polyurethane insulation used on bulkheads and overheads shall be nominal 2 lbs/ft^3 density. For decks underfoot, the

polyurethane foam shall be nominal 4 lbs/ft^3 density, unless otherwise specified in writing by NAVSEA. The insulation thickness will be sufficient to maintain the specified space temperatures without sweating on the exterior surfaces of the refrigerated space boundaries at shipboard ambient conditions.

635-4.1.3.1 Sheathing (Inner Lining). Various sheathing materials are used for the bulkheads and overheads. Metal sheathing may be either corrosion-resistant steel, ANSI type 302 or 304 or extruded aluminum panels.

635-4.1.4 DECK COVERING. Refrigerated space deck insulation may be protected with a covering of extruded aluminum panels, and may be covered using concrete with a latex mastic coating, MIL-D-3134, Type II, or be protected with a concrete-mastic mix consisting of one part Portland cement, one part mastic, two parts sand, and three parts grit (gravel).

635-4.1.5 FURRING AND FRAMING. See Table 635-4-1. Furring and framing material preferably will be wood. However, metal may also be used. Wood furring, framing, and sheathing that is cut, faired, or drilled will be given a heavy brushcoat of preservative, MIL-W-18142, Type A, on the cut surface. The materials specified in paragraph 635-4.1.2 through paragraph 635-4.1.5 may be specified on all ships, except that non-magnetic materials are specified for use on minesweepers.

635-4.2 INSTALLATION

635-4.2.1 GENERAL INSTALLATION TECHNIQUES. Before any insulation or sheathing is installed in refrigerated stores spaces, the external boundary of all refrigerated spaces, whether it be structural bulkheads and decks or self supported sheathing are tested for airtightness and shall be made airtight where necessary. In addition, the ship structure and sheathing supports are painted or otherwise treated in accordance with**NSTM Chapter 631, Preservation of Ships in Service (Surface Preparation and Painting)** , before installing insulation.

Table 635-4-1 FURRING AND FRAMING MATERIALS

Use	Wood	Grade [1] /	Preservation
Framing	Southern Pine Douglas FirarchWestern hemlockHem-FirSpruce	No. 1 StructuralJoists and PlanksorNo. 1 StructuralLight Framingor better	Pressure-treated in accordance with TT-W-571 with one of the waterborne salt preservatives only of Table I thereof, to the retentions specified. For use in fresh water, ground contact or for important structural members.
Sheathing(Under course and outer course if covered by a surface sheathing)	Southern Pine T & GWest-CoastHemlock, Hem-FirDouglas FirLarch T & GPlywood T & G	No. 1 BoardsSelect MerchantableStructural I C-D	Same as aboveSame as above Same as above
Sheathing(Exposed course)	Southern Pine T & GDouglas FirLarchWest-coastHemlock, T & GPlywood	C FlooringC and betterFlooring B-C Exterior or better	MIL-L-19140, Type IIMIL-L-19140, Type II MIL-L-19140, Type II
1/ Southern Pine Inspection Bureau, West Coast Lumber Inspection Bureau or Western Wood Products Association Standard grading rules, as appropriate			

1. Bulkheads and Overheads. Furring and framing to support sheathing and equipment shall be installed first,

thermally isolated, and shall be bolted directly to deck beams, frames, stiffeners, or to flat bar clips welded to ship structure. Fastenings, such as bolts, lag screws, and wood screws, are hot-dipped galvanized and so arranged to prevent metal-to-metal contact between sheathing and structure. Where metal furring and framing is used, it shall be isolated from the ship structure by use of phenolic or fibrous-glass-r einforced resin laminate blocks.

a Framing for each side of non-structural division bulkheads between refrigerated spaces is made independent of the other side by staggering frames. No through framing is permitted.

b Supports for coils are integrated with the system of furring and framing. Supports for unit coolers shall be attached directly to the ships structure. Supports shall be independent of lining.

c Insulation shall be closely fitted and adequately held in place, usually with skewers until the sheathing is installed. No studs or pins are permitted. Preformed polyurethane block insulation, where used, is secured to the structure and to adjacent blocks with adhesive. The entire space between the sheathing panels and ship structure shall be filled with insulation and installed in such a manner as to eliminate voids. Where insulation is installed in multiple courses, the butts and seams of each course are staggered against the preceding course.

d Sheathing for bulkheads and overheads is fastened to the furring and framing with stainless steel screws. Seams between sheathing panels will be in the vertical plane only and covered with 2-inch-wide seam straps fastened with stainless steel screws. A 1-by-1 -by-1-inch Z-shape is fitted between the sheathing bottom and the deck cove. All inside and outside corner seams of the sheathing are covered with 1-by 1-inch angles, fastened with stainless steel screws. Where reinforced-resin laminate sheathing is already installed, the seam straps, Z-shape, and corner angles shall be 0.081-inch aluminum.

e Sheathing shall be made splash tight, except that deck sheathing and bulkhead sheathing to a height of 12 inches above the deck shall be made watertight.

2. Deck Underfoot. For decks underfoot, the insulation may be fibrous glass or preformed polyurethane. Where preformed polyurethane block insulation is used, the polyurethane shall be installed in at least two courses. The deck is coated with odorless asphalt emulsion, Flintkote, C-13-HPC, or equal, before installing the first course of polyurethane block. The top of each course of block, including the final course, shall be coated with the asphalt emulsion. Each course is staggered against the preceding course, with two adjacent edges of each block being coated with the asphalt emulsion. The block-type insulation shall extend up the sides 12 inches above the full deck insulation. A three-layer vapor seal membrane of 15-pound felt paper, each laid in and covered with asphalt emulsion, is applied over the insulation and extends up the sides to completely cover the block insulation.

a When metal deck sheathing is installed, it is fastened to a system of furring and framing isolated from the ship structure. When fibrous-glass-reinforced laminate is used, it is laid in two 3/16-inch-thick layers, completely bonded to each other with staggered joints flush with the deck. The joint between the bulkhead and deck sheathing is made watertight.

b When a concrete-mastic-mix deck covering is specified, it will be at least 2 inches thick, and will be applied over the emulsion-covered, felt paper vapor seal membrane.

c The finished decking is coved up the sides 6 inches so as to be flush with the bottom of the sheathing.

d Reinforcement is 2-by-2-inch by 14-gauge, galvanized steel wire mesh. The method of laying the finished decking shall be such as to prevent cracking or shrinking while setting. The finished decking shall be thoroughly set before the spaces are cooled down in temperature. Where rat proofing is required, the cover is reinforced with 1/2-inch by 18-gauge, galvanized wire mesh 4 inches out on the deck and up to the bottom of the bulkhead sheathing.

635-4.2.2 BREATHER OPENINGS. Water vapor in warm air exhibits a pronounced tendency to migrate to colder air. Whenever the temperature at any point within a partition becomes lower than the dew point of the air,

condensation of the water vapor tends to occur at that point. In refrigerated stores spaces, where mineral wool or fibrous glass insulation is used, the dew point is usually located somewhere in the insulation. The presence of water in the insulation is undesirable since it reduces the efficiency of the insulation.

1. Since the coldest air is at the coils, moisture, if present in the insulation, will migrate to the coils, provided a path of migration is available. In ships where the inner sheathing in refrigerated spaces is welded watertight, breather openings with plugs or caps shall be provided in the sheathing. Where the joints between sheathing panels are butted together and panel edges are held to the furring by screws, there is sufficient opening to provide a natural migration path for the moisture.

2. The breather plugs are inserted in the breather openings when defrosting or washing down the spaces in order to seal the sheathing, prevent moisture from entering the fibrous glass insulation, and when conducting air tests to determine the tightness of the sheathing. Breather plugs are kept out when conducting air tests of structural boundaries, and at all other times, in order to permit the migration of moisture from the fibrous glass insulation.

635-4.2.3 REFRIGERATED SPACE DOORS. Refrigerated space doors are of the following types:

a. Type A. Front and back panels shall consist of 3/8-inch (minimum) exterior grade plywood, with a facing of USSG 20 (minimum) CRES, Type 302, Number 4 finish, all bonded together and to the insulation. Plywood shall be of Grade B-C or better, in accordance with Department of Commerce Product Standard, PS-1, and CRES facing shall be bonded to the better plywood face by a process using heat and pressure. The door is to be filled with minimum 4-inch polyurethane insulation, MIL-I-24172, Type II, foamed in place to form a bonded structure with plywood facing and douglas fir stiffeners. The edge perimeter shall consist of either 3/4-inch exterior grade plywood with an overlay of extruded synthetic rubber, all bonded together to the insulation or USSG 20 CRES Sheathing, Type 302, No. 4 finish. The synthetic rubber extrusion shall form the door overlap to which the air seal gasket shall be secured. The gasket at the door lip is to be grease-resistant synthetic skin with resilient core. The frame component shall consist of 3/4-inch (minimum) Douglas fir, equal to or better than the grade for framing on Table 635-4-1 , face casing and jamb sheathed with USSG 20 CRES as above. Exposed wood shall be given a heavy brush coat of clear catalyzed polyester resin. Soldered or welded joints shall be ground smooth and polished.

b. Type B. Front and back panels, including perimeter edges and frame, shall consist of glass-fiber-reinforced plastic laminate of fire-resistant resin, MIL-R-21607, 1/8-inch minimum thickness. The frame component shall consist of a 3/4-inch (minimum) exterior grade plywood jamb and a 1-5/8-inch Douglas fir face casing. Both the jamb and the casing shall be sheathed with glass-fiber-reinforced plastic laminate, 1/16-inch thick (minimum). The weight of glass fiber shall be a minimum of 40 ounces per square yard. Front and back panels, including perimeter edges and frame, shall be permanently bonded into a single unit with the above resin or an epoxy adhesive. The finish shall be flat and smooth and shall consist of a molded white gel coat. Except for the gasketed edge, the corners and edges shall be rounded. Clearance between the door and frame shall not exceed 1/2-inch. Type B doors and fiberglass-reforced resin will not be specified in future ship specifications.

   1 The doors shall be factory assembled and aligned complete with frames, hinges, hardware, gaskets, and thermal breaks, so that they may be installed onboard ship without distortion to the plane of the frames or disturbing the gasket seals. The doors shall be operable from both sides. A locking device with an inside emergency release shall be provided for each door. It shall permit the door to be opened from the inside, even if padlocked. The inside release push rod shall be Monel, corrosion-resistant steel, or copper-nickel. It shall permit the door to be opened from the inside even if padlocked. A label plate or other device containing directions for operating the emergency lock release shall be permanently mounted on the door under

or on the emergency lock release. Each door shall be provided with a hold-open, self-falling hook latch with a rubber bumper. Hardware shall be zinc-coated or chrome plated.

2 In way of hardware attachments, doors shall be reinforced with steel inserts in back of panels. Doors shall be rectangular and shall have a clear opening of the same dimension of the door being replaced or shall have a clear opening of 30 by 72 inches and a sill height of 2 inches above the interior deck height. Pallet conveyor doors shall have a total clear opening of the same dimension of the door being replaced or shall have a clear opening of 60 inches and a sill height of at least 2 inches above the interior deck height. Doors shall have the thermal equivalent of the insulated bulkhead in which they are located.

635-4.3 MAINTENANCE, INSPECTION, AND REPAIR

635-4.3.1 MAINTENANCE, TESTS, CHECKS, AND INSPECTION. At all activities where PMS is installed, scheduled maintenance shall be conducted in accordance with the Maintenance Requirement Card (MRC) set.

1. Sheathing shall be inspected annually to ascertain that the sheathing has not been punctured. Where sheathing had been originally installed watertight, punctures or openings in seams may have allowed moisture to enter the insulation. Punctures in any type of sheathing shall be repaired to prevent the exit of water into the insulation and to prevent collection of foreign matter for sanitary reasons.

2. If the design temperature of the space cannot be maintained or there is evidence of sweating on the exposed exterior boundaries of refrigerated spaces, insulation shall be checked as a possible source of trouble due to becoming water soaked.

3. Some spaces with fibrous insulation have pipe plugs inserted in the deck under the insulation. Removal of this plug is one way to determine if water is accumulating in the insulation space due to sheathing failure. Where spaces do not have inspection plugs, it is necessary to drill a hole in the deck to inspect as described above. The hole shall be tapped and fitted with a 1-inch pipe plug.

4. The existence of condensation or frost formation on the exterior of refrigerated spaces are indications of areas of deterioration of insulation or insulation voids.

635-4.3.2 REPAIR. Required repairs will depend on the nature of the damage. When extensive deck repairs are indicated, the condition of the deck insulation will be ascertained by inspection. Holes 12- to 18-inches square are cut in the deck. Deck areas of less than 250 square feet require only one hole cut in the center. Deck areas that are more spacious require additional holes cut in the corners. Hot cutting shall not be used, as it will damage the insulation.

1. If standing water or excessive moisture is found, leaks shall be found and repaired. The insulation shall then be dried by blowing warm air through one or more inspection holes while venting through others. When the insulation is dry, the deck shall be repaired. When repairs are made to the vertical sheathing, the bulkhead insulation is inspected to determine if the steel structure is corroded. Wet insulation is dried in a manner similar to that used for drying deck insulation.

2. If the fibrous glass or mineral wool insulation has been damaged by water and cannot be economically restored to its required efficiency, or is ineffective for other reasons, the insulation is to be repaired or replaced as follows:

   a Standing water shall be drained off and the material structure thoroughly dried before installation of the polyurethane foam material.

b Polyurethane foam insulation, MIL-I-24172, Type II, shall be poured or froth-foamed-in-place through appropriately spaced holes in the sheathing and allowed to fill the voids between the sheathing and the ship structure.

c Although desirable, it is not necessary to remove the old insulation except where it will impair the application of the foam insulation.

d Where the fibrous glass insulation and the sheathing are removed, precast polyurethane foam, MIL-I-24172, Type I, may be used in place of poured or froth-foamed-in-place polyurethane.

e The foam insulation shall be installed in conformance with the insulation manufacturer's instructions. Sheathing for overhead and bulkheads shall be supported by a system of furring and bulkheads shall be supported by a system of furring and framing. Furring shall be used to serve as support for such items as coils, piping, and lighting fixtures. Coils, unit coolers, and their supports shall be made compatible with the development of refrigerated spaces, and furring as needed for their support shall be independent of linings. Battens shall be provided as protection in way of all cooling coils and supported, independent of the lining; sufficient space shall be allowed for efficient circulation of air.

SECTION 5.

THERMAL INSULATION FOR COMPARTMENTS

635-5.1 GENERAL

635-5.1.1 APPLICATIONS. Thermal insulation is applied to compartment boundaries to reduce the rate of heat transfer to or from heated, ventilated, and air-conditioned spaces; to reduce condensation; and to retard excessive temperature rise in magazines and associated spaces in the event of fire in adjacent spaces. (Section 9 addresses the use of fire insulation.) Thermal insulation may be installed in conjunction with antisweat treatments to reduce condensation, and to serve as a vapor barrier to prevent the insulation from absorbing condensation.

635-5.1.2 THICKNESSES OF INSULATION. The rate of heat flow through any homogeneous material such as thermal insulation is inversely proportional to the thickness. However, when installed, the insulation can no longer be considered as homogeneous, since the structure to which it is secured, and the air films on either side of the composite structure-and-insulation, must be considered. Because of this, equal increments in the thickness of insulation do not yield equal reductions in rate of heat transfer. In practicality, this consideration means that small variations of insulation thickness do not materially affect the rate of heat flow and corresponding ventilation air volumes that are required. As a result, it has been possible to adopt uniform thicknesses of insulation for varying rates of heat transfer at different temperature levels. The extent and thickness of insulation to be installed shall be in accordance with individual ship specifications. In the absence of specific guidance, the following thicknesses are acceptable.

a. Surface Ships. The thicknesses in general use are:

1 Two inches of material in the following areas:

(a) Compartment overheads exposed to the weather where the ambient temperature of the compartment is under 105°F, and for vertical boundaries of these compartments where exposed to the weather if the compartment is electrically heated.

(b) Boundaries of main machinery spaces in the way of other compartments.

2 One-inch material is generally used in the following areas:

(a) Compartment overheads exposed to the weather where the ambient temperature of the compartment is 105°F or over. .

(b) Vertical boundaries of compartments exposed to the weather or sea where the ambient temperature of the compartment is under 120°F.

(c) Between air-conditioned compartments and compartments where the ambient temperature of the adjacent compartment is between 95°F and 119°F.

(d) All ammunition space boundaries.

3 Other thicknesses are installed to meet special conditions.

b. Submarines. Hull insulation used on submarines prior to SSN 21 Class to insulate the pressure hull consisted of elastomeric foam insulation conforming to MIL-P-15280. Beginning with the SSN 21 Class, the hull insulation consists of material in accordance with PPD-802-6335737. Two materials known to meet this spec are polyimide foam, type CC306-KCF, manufactured by Reilly Benton Co., or fibrous glass, type HIMS, manufactured by Manville Corp., or equal. Use either of these two materials in place of MIL-P-15280 installed in older ships when the MIL-P-15280 insulation must be repaired or replaced. Thickness is the same as that specified for MIL-P-15280. One-inch thick material is applied to the pressure hull and webs of internal frames. One-half-inch thick material is applied to flanges of the internal frames.

635-5.1.3 MATERIALS. Thermal insulation materials for compartments consist of:

a. Fibrous-glass faced thermal insulation board, MIL-I-742, Type 1.

b. Fibrous-glass unfaced thermal felt, MIL-I-22023, Type I, Class 6.

c. Fibrous-glass faced thermal and sound absorbing felt, MIL-I-22023, Type III.

d. Sheathing, consisting of perforated aluminum, MIL-S-12875, Type II, Class B.

e. Fibrous-glass tape, MIL-C-20079, Type II, Class I.

f. Latex adhesive, MIL-A-3316, Class I, Grade A.

g. Epoxy adhesive, MIL-A-24456.

h. Aluminum alloy stud, MIL-S-24149/2, Type III, Class 3, with compatible aluminum press-fit cap as shown on NAVSEA drawing 804-5773931.

i. Carbon steel stud, MIL-S-24149/1, Type VI, Class 3, with compatible carbon steel press-fit cap.

j. Aluminum alloy or steel spacers.

k. Adhesive-attached studs, in general accordance with MIL-S-24149, except that the studs are welded to a perforated metal baseplate, at least 2 inches square, of the same metal as the stud.

l. Elastomeric foam, MIL-P-15280, Form S.

m. Adhesive MIL-A-24179, for securing polyimide foam thermal insulation panels.

n. Polyimide foam faced thermal insulation panel, DOD-I-24688,Type II, Class 1.

o. Closed cell foam meeting the requirements of SEAWOLF Class Project Peculiar Document No. 802-6335737, such as closed cell polyimide foam.

p. Polyimide foam, type CC306-KCF, manufactured by Reilly Benton Co., (a material known to meet the requirements of material 15 above), or equal.

q. Fibrous glass, type HIMS, manufactured by Manville Corp., (a material known to meet the requirements of material 15 above), or equal.

r. Acrylic tape, 3M Y9485, or equal.

635-5.1.4 INSTALLATION. Surface preparation on both surface ships and submarines shall be in accordance with **NSTM Chapter 631, Preservation of Ships In Service (Surface Preparation and Painting)** .

635-5.2 SURFACE SHIPS

635-5.2.1 GENERAL

1. Where both thermal and acoustic absorptive treatments are specified, only the acoustic absorptive treatment is applied to plane surfaces, and thermal insulation is applied to beams and stiffeners. (See Section 7 for guidance on the installation of acoustic absorptive treatments.)
2. Studs for fibrous glass thermal insulation shall be spaced on approximately 12-inch centers, but in no case more than 15-inch centers. Studs shall not be spaced more than 6 inches from the edge of thermal insulation. Stud spacing for polyimide foam thermal insulation shall not exceed 18-inches, except that studs shall not be spaced more than 12 inches from the edge of the insulation. In areas that are inaccessible for a stud gun, studs welded to a perforated pad may be bonded to ship structure using adhesive, MIL-A-24456. A maximum of 25 percent of the total number of studs required to secure insulation on each plane area bounded by stiffeners or bulkheads may be attached in this manner.
3. Thermal insulation installed over constrained damping tiles are installed in the same manner as acoustic insulation, as discussed in Section 7.
4. Insulation on vertical surfaces extends from 6 inches above the deck to the overhead, except for the warm side of refrigerated stores spaces, uptake enclosures, magazines, and ammunition handling and ready service spaces, where it extends from deck to overhead. Whenever thermal insulation extends to the deck, attach a 4-inch by 1/8-inch steel or aluminum alloy coaming, as appropriate, to the deck with a continuous weld and install the insulation behind the coaming. Install fibrous glass thermal insulation on beams and stiffeners as shown in Figure 635-5-1. Install filler pieces, consisting of fibrous glass-insulation felt, MIL-I-22023, on the webs to form a boxed-in configuration when the web has a depth of 6 inches or less. Faced polyimide foam is installed on the webs and flanges of beams and stiffeners using MIL-A-24179 adhesive, 3M's Y9485 acrylic tape, or equal. Studs are not required on flanges or webs when polyimide foam is installed. Insulation is installed on plane surfaces and on the flanges of beams and stiffeners prior to installing polyimide foam on the webs, such that the polyimide foam on the webs tends to hold insulation on plane surfaces and polyimide foam on the flanges in place. All joints and seams in the thermal insulation are to be covered with fibrous glass tape, MIL-C-20079, Type II, Class 1, using adhesive, MIL-A-3316, Class 1, Grade A.

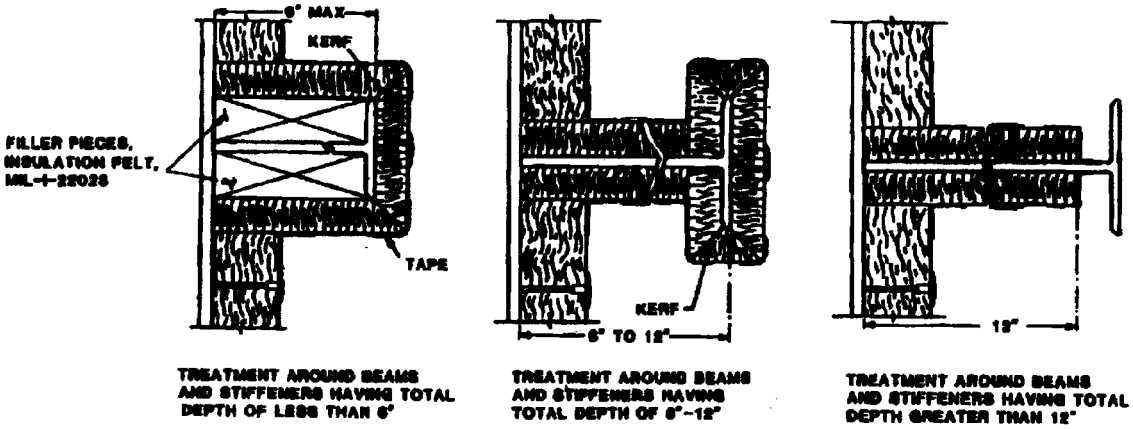

Figure 635-5-1. Installation of Fibrous Glass Thermal Insulation on Beams and Stiffeners

5. After installation, thermal insulation board is painted to match the other surfaces in the compartment. Do not paint fibrous glass-faced thermal and sound absorbing felt conforming to MIL-I-22023, Type III. The fire-retardant paint applied at the factory shall be tinted to match the other surfaces in the compartment where insulation is to be installed. All repairs and replacement shall be made using material conforming to PPD 802-6335737.

6. Apply a vapor barrier, consisting of one coat of vapor barrier compound, MIL-C-19565, to all insulation within laundries, sculleries, galleys, drying rooms, and to the insulation on the warm side of refrigerated stores spaces. There shall be no breaks in the vapor barrier coating.

7. When fibrous glass-faced thermal and sound absorbing felt (MIL-I-22023, Type III) is specified, the installation shall be as described in paragraph 635-5.3. Details of the installation of thermal insulation in compartments are shown on NAVSEA drawing 804-5773931.

635-5.2.2 SUBMARINES. Elastomeric foam plastic insulation, MIL-P-15280, Form S, has been installed on submarine pressure hulls prior to the SSN 21 Class. Beginning with the SSN 21 Class, the authorized materials for submarine hull insulation are as described in PPD-802-6335737. There are two types of material. Two products which are known to meet this specification are polyimide foam type CC306-KCF manufactured by Reilly Benton Co., or fibrous glass, type HIMS, manufactured by Manville Corp., or equal. Use either of these materials in place of MIL-P-15280 installed on older ships when the MIL-P-15280 insulation must be repaired or replaced. These insulation materials are installed as follows:

1. Structural surfaces shall be prepared in accordance with **NSTM Chapter 631, Preservation of Ships in Service (Surface Preparation and Painting)** . Surfaces to be insulated are coated with adhesive, MIL-A-24179, and allowed to dry from 2 to 5 minutes or until tacky.

2. For all kinds of insulation. The insulation is cut to the desired size and the cut edges coated with adhesive, MIL-A-24179; when tacky, the insulation is pressed into place. No shoring is required.

3. For elastomeric foam insulation. Any voids between adjacent sheets of material or in way of penetrations for hull attachments are filled with grouting. When completely dry, the grouting shall be sanded smooth and the surface of the insulation cleaned of any dirt or foreign material. Unfaced elastomeric foam plastic insulation is sealed with one coat of water-based paint DOD-C-24596, Type I to ensure that the seams remain tight. Both unfaced elastomeric foam plastic insulation sealed with water-based paint and faced insulation are painted as follows: apply one coat of Ocean Coatings Co., ′OCEAN 634’ or equal, 1 to 2 mils DFT, followed by two coats of ′OCEAN 9788’ or equal, 5 mils DFT per coat. Approved NAVSEA equivalent coatings may also be used.

4. PPD-802-6335737, Polyimide foam, Type CC306-KCF or fibrous glass, Type HIMS installation. Cut the insulation to the desired size. Surfaces to be insulated are then coated with adhesive, MIL-A-24179, and allowed to dry from 2 to 5 minutes or until tacky. Alternatively, acrylic tape, 3M Y9485, or equal, may be used. The tape must be applied to the insulation panels at least 3 days prior to installation of panels on the hull. Apply pre-cut insulation panels in the flat frame bay area first, then wrap around the T-frame ends and insert the piece on the frame web. All joints and penetrations are covered with fibrous glass tape, MIL-C-20079, Type II, Class 1, secured with adhesive, MIL-A-3316. After the adhesive has dried, brush Ocean Coating Co., OCEAN 1001 coating, or equal over all taped areas. Two coats of water-based paint qualified to DOD-C-24596, Type I are then applied to all insulated areas.

5. Submarine tank tops that form part of a deck or walking flat in air-conditioned spaces, when authorized, shall have special treatment to prevent condensation. A 1-inch-thick fibrous glass blanket, MIL-I-22023, is compressed by a 1/4-inch steel plate supported from the tank top by thermally isolated connections. The area between shall be airtight. The overall thickness shall be approximately 1 inch. MIL-P-15280 (Rev. G or later)

Form S, and MIL-I-24703 were used on tank tops in non-walking areas on some existing ships. All repairs and replacement of this material shall be made using material conforming to PPD-802-6335737.

635-5.2.3 MAINTENANCE. Where the Planned Maintenance System (PMS) is installed, scheduled maintenance shall be conducted in accordance with the Maintenance Requirement Card (MRC) set.

1. Hull insulation will be inspected at least at semiannual intervals together with other portions of the hull structure. Areas behind insulation on weather and sea boundaries of ships operating in cold waters (below 40°F) in ammunition spaces, where condensation is likely to occur, will be inspected during overhauls to ensure that corrosion has not occurred on ship structure. Action will be taken to have all damage, including that considered as minor, repaired at once since prompt repair will forestall development into major repair jobs.
2. In case of water damage, hull insulation shall be replaced.

635-5.2.4 REPAIR. Use the following procedures for repair of hull insulation. Whenever the repair is large-scale (greater than 10 percent of the insulation must be replaced), all elastomeric foam plastic shall be replaced by either PPD-802-6335737, polyimide foam, Type CC306-KCF or HIMS fibrous glass.

635-5.2.5 SURFACE SHIPS. Two procedures for repair of damaged fibrous glass insulation board have been established; one for accomplishment by ship forces, and the second by qualified repair activities.

1. Each ship fitted with fibrous glass insulation board has an allowance of fibrous glass tape and adhesive for shipboard repair of small tears, dents, gouges, and similar damage to the insulation. Application of the tape will in most instances prevent further damage and ensure the continued serviceability of the insulation until the next overhaul of the ship when, if warranted, more extensive repairs can be made.
2. For extensive repairs to the insulation, in most instances the insulation may, instead of being replaced, be repaired economically with a resultant condition at least equal to that of newly installed board. The method is based on the fact that most damage occurs initially to the cloth surface, and leaves the body of the board relatively intact.
   a Before the cloth covering is applied, prepare the damaged insulation as follows:
      (1) Replace missing studs.
      (2) Repair minor cuts, tears, and dents.
      (3) Cover studs and fasteners with small patches of cloth in order to provide a uniform foundation for the overall cloth.
   b After the damaged insulation has been prepared, glass cloth conforming to MIL-C- 20079, Type I, Class 2, is cut to fit a suitable section of the area to be covered. A typical application would take a single piece of cloth from deck to overhead between structural members. The corresponding section of insulation is given a coat of adhesive, conforming to MIL-A-3316, Class 1, applied with either a brush or trowel, and the cloth is set in place and pressed smooth. A top coat of adhesive is then applied on the cloth as heavily as necessary to fill all the spaces of the cloth and ensure the adherence of the cloth.

635-5.2.6 SUBMARINES. Repair of elastomeric foam plastic or material in accordance with PPD 802-6335737, polyimide foam, Type CC306-KCF or HIMS fibrous glass insulation manufactured by Manville Products Corp., used for submarines shall be as follows:

1. Cut out and remove damaged insulation.

2. Remove adhered fragments of insulation by scraping. Structure does not need to be cleaned to bare metal, except in way of newly welded attachments, where loose slag or other surface contaminants maybe present.
3. Take care in cutting replacement insulation to ensure a neat fit with abutting insulation.
4. Installation and painting of replacement polyimide foam conforming to PPD 802-6335737, Type CC306-KCF, and HIMS fibrous glass insulation, Manville Products Corp., is in accordance with paragraph 635-5.2.2.

635-5.3 ANTI-SWEAT TREATMENT

635-5.3.1 MATERIALS. Material normally used to prevent sweating of cold surfaces is vermiculite paint. Methods of application are covered in **NSTM Chapter 631, Preservation of Ships In Service (Surface Preparation and Painting)** . Anti-sweat coating, TT-C-492, may be used as an alternative to vermiculite.

635-5.3.2 APPLICATIONS. Vermiculite paint (refer to **NSTM Chapter 631**) is applied on the warm side of uninsulated boundaries, including webs and flanges of beams and stiffeners.

1. This paint is applied on the following:
   a Interior surfaces including uninsulated flanges of all spaces, except tanks, voids, and heat producing spaces exposed to the sea or weather, or where sweating will occur because of opposite extremes in temperature.
   b Under deck, and all vertical boundaries of air-conditioned spaces common to spaces that are not air-conditioned.
   c Exterior surfaces of water tanks in way of all spaces except voids.
   d Hangers, brackets, clips, and other members secured to or penetrating boundaries exposed to the sea, and where dripping will affect electric installations.
2. Anti-sweat coating, TT-C-492, may be used in the above areas (except as noted here) where vermiculite does not satisfactorily prevent condensation. This material performs on the principle of absorption and evaporation. Condensation that forms on the surface of the coating is absorbed. This process continues until the coating becomes saturated (at which time sweating will appear) or until the ambient conditions change, permitting re-evaporation or release of the moisture back into the air. Since the material will absorb fluids, it may not be installed in areas where it is subject to conditions such as oil spills or sprays, which will contaminate the material, impair its effectiveness, and eventually constitute a fire hazard. It may not be used in flooded areas or locations subject to severe abrasion, as this also will result in failure of the material to perform satisfactorily. Surface preparation and application procedures are covered in specification TT-C-492.

SECTION 6.
THERMAL INSULATION FOR DUCTS

635-6.1 GENERAL

635-6.1.1 APPLICATIONS. Ducts are insulated to reduce transfer of heat between the air carried in the system and the surroundings, and to prevent condensation of moisture on the ducts.

a. In general, supply trunks and ducts, which carry unheated outside air, are insulated where they pass through, or terminate in, hot or normally heated spaces. This is to prevent condensation on the outside of the ducts and chilling of normally heated spaces in cold weather and, in warm weather, further heating of the atmospheric

air before reaching the space it is intended to cool. Supply trunks and ducts carrying preheated air are insulated only where they pass through heat-producing spaces. Supply ducts carrying reheated air are insulated only to prevent loss of heat where they pass through spaces other than the space served.

b. To prevent discomfort to personnel, ducts carrying reheated air are insulated around berths in the space being served if the temperature in the duct is higher than 90°F.

c. Insulation is applied on parts of air-conditioning systems where the space dewpoint is more than 4°F higher than the duct air dry bulb temperature.

d. Return air ducts from air-conditioned spaces need only be insulated where they pass through heat producing spaces.

e. Insulation is applied on parts of exhaust ducts and trunks from heat producing spaces that pass through spaces other than uptake enclosures to prevent overheating the spaces.

f. Ventilation heaters are insulated only when installed in the weather (to prevent heat loss), and where necessary to prevent either overheating of the space or injury to personnel.

635-6.1.2 MATERIALS. Round or flat oval ducts are generally insulated with 1-inch-thick fibrous glass insulation felt, MIL-I-22023, Type I, Class 5, or polyimide foam, DOD-I-24688. Square or rectangular ducts are generally insulated with 1-inch fibrous glass insulation board, MIL-I-742, Type I or II, or MIL-I-22023, Type III, thermal and acoustic insulation with vapor barrier. The use of elastomeric foam, MIL-P-15280, is prohibited for use on the ventilation ducts of all ships unless specifically authorized by NAVSEA.

1. When unfaced fibrous glass insulation felt or unfaced polyimide foam insulation is used, the insulation is covered with fibrous glass cloth, MIL-C-20079. The fibrous glass cloth is either secured with adhesive, MIL-A-3316, Class 1, Grade A, and coated on the outer surface with adhesive, MIL-A-3316, or, alternatively, rewettable fibrous glass cloth (see paragraph 635-2.4.3.2) is used. The adhesive or rewettable fibrous glass cloth is allowed to dry thoroughly before painting or adding a vapor barrier, if required.

2. If a vapor barrier coating is required on faced insulation surfaces, use MIL-C-19565.

635-6.1.3 INSTALLATION. Insulation is installed and lagged (covered) on ducts where required, as shown on NAVSEA drawing 804-5773932 and in accordance with the instructions below.

1. For installation of blanket type insulation, the outer surface of the duct is wrapped with the specified insulation blanket, fibrous glass or polyimide foam secured with adhesive, (MIL-A-3316). For wide ducts, self-adhesive-backed insulation pins, carbon steel (MIL-S-24149, Type VI, Class 3) or aluminum alloy (MIL-S-24149, Type III, Class 3) as applicable and steel or aluminum caps (commercial), as applicable, may be used to hold insulation in place while the adhesive sets. The outer surface of the unfaced insulation is then coated with adhesive, MIL-A-3316, and lagged with a covering of fibrous glass cloth, MIL-C-20079. Finally, the outer surface of the faced insulation is coated with adhesive, MIL-A-3316, and allowed to dry thoroughly before painting or adding a barrier, if required. Where required, a vapor barrier coating, MIL-C-19565, is applied to the surface of the fibrous glass cloth lagging, MIL-C-20079.

2. Ducts are insulated by applying adhesive on the underside of flat surfaces and other necessary locations, applying the insulation to the duct, and tying the insulation in place with masking tape or fibrous glass thread, MIL-C-20079, Type III, to hold the insulation in place until lagging is applied. The insulation felt is lagged with fibrous glass cloth secured with the specified adhesive. If hard-surfaced fibrous glass insulation board is used on the duct, the joints of the board are covered with fibrous glass tape, MIL-C-20079, Type II, Class 1, secured with adhesive, MIL-A-3316, Class 1, Grade A.

3. To apply insulation to ventilation heaters, first cut the hard-surfaced fibrous glass board in panels to fit all surfaces except the standing flanges, beveling the edges of the panels at 45 degrees to permit access to the bolts in the flanges. Coat the surfaces to be insulated with cement, and fit the panels to the coated surfaces, applying sufficient pressure to ensure adherence of the panel to the surface. All seams in the fibrous glass board panels are to be taped with 2-inch-wide fibrous glass tape, MIL-C-20079, Type II, Class 1, applied with adhesive cement. To assist in holding the panels in place and to cover the exposed fibrous glass, the beveled boundaries of the panels are to be covered with 4-inch-wide fibrous glass tape, leaving a 3/4-inch lap on the standing flange. No lagging of the Type I fibrous glass board insulation is required. Casings of cooling coils are generally insulated at the factory. Where the insulation has not been installed before delivery, the casings will be insulated as specified above for heaters.

4. For installation of hard surfaced fibrous glass board or polyimide faced panels for thermal insulation, the outer surface of the duct is covered with either fibrous glass cloth-covered board, MIL-I-742, Type I or Type II, with adhesive (MIL-A-3316, Class 2), and lagged with a covering of glass cloth MIL-C-20079. Alternatively, polyimide foam, glass-cloth faced panels (DOD-I-24688 Type II, Class 1, or Type I) with adhesive (MIL-A-3316, Class 1) lagged with a covering of glass cloth (MIL-C-20079) can be used. For wide ducts, self-adhesive-backed insulation pins and caps may be used to hold insulation in place while the adhesive sets. The seams between sections of the insulation board are covered with 2-inch-wide fibrous glass tape, MIL-C-20079, Type II, Class 1, using adhesive cement, MIL-A-3316, Class 1. The entire application is then allowed to dry thoroughly before painting or adding a vapor barrier, if required.

5. Vapor barrier coatings are required on the finished surface, except where MIL-I-22023, Type III, insulation is used, including flanges, seams, joints of insulated air-conditioning ducts, and trunks. One coat of a vapor barrier compound, MIL-C-19565, shall be applied over fibrous glass-cloth faced insulation board or felt.

6. After installation, the faced insulation is painted to match the other surfaces in the compartment.

7. Insulation, where required on watertight ducts, shall not be installed until specified compartment pressure tests have been completed.

8. Sheathing shall be installed wherever necessary to protect insulation from damage.

635-6.1.4 MAINTENANCE. Where Planned Maintenance System (PMS) is installed, conduct scheduled maintenance in accordance with the Maintenance Requirement Card (MRC) set.

1. The insulation and lagging of ducts will be inspected periodically to ascertain if any damage has been incurred or if condensation has saturated the insulation and lagging.

2. Damage to the insulation is particularly likely to occur on vertical trunks due to passage of personnel. Condensation may occur under extreme conditions, and insulation that has failed shall be replaced.

635-6.1.5 REPAIR. Where bonded fibrous glass or polyimide foam insulation or fibrous glass lagging has been damaged, the affected sections shall be replaced following the same procedure given above for installation.

1. Where fibrous-glass board has been damaged, it will be repaired if possible, using the method described for repair of fibrous glass hull board insulation or, if that is not possible, it will be replaced.

2. Although not directly concerned with the repair of ventilation systems, one point in connection with maintenance is of considerable importance. When insulation or paint is being removed from a compartment, all ventilation terminals drawing air from the space are to be protected with a thin cloth or screen to prevent the

entrance of paint and insulation dust and particles. This is necessary to prevent the creation of a fire hazard caused by adherence of paint dust to the interior surfaces of ducts, fans, and heaters, and to avoid reduction of the ventilation effectiveness because of clogging.

SECTION 7.

ACOUSTIC ABSORPTION TREATMENT AND TRANSMISSION LOSS TREATMENTS FOR COMPARTMENTS

635-7.1 GENERAL

635-7.1.1 APPLICATIONS. Compartment treatments with acoustic absorption and transmission loss properties are installed as necessary to meet space noise criteria for the particular ship.

a. Treatments with acoustic absorption properties are used to dissipate sound energy within a space. Spaces with excessive noise due to internal or external noise sources may be installed with treatments with acoustic absorptive properties to reduce internal noise levels. Treatments are also used to reduce reverberation effects (echoing) in spaces that require good speech intelligibility.

b. Treatments with transmission loss properties can reduce noise transmitted into or out of a space. Treatments with transmission loss properties are applied at the boundaries of noisy spaces such as fan rooms and machinery rooms to help keep noise from escaping into adjacent spaces. Treatments with transmission loss properties are also installed in spaces with low noise requirements to reduce noise contamination from external sources.

635-7.1.2 MATERIALS. Acoustic treatments hardware and lagging components consist of:

a. Perforated hard surfaced fibrous glass acoustical board conforming to MIL-A-23054. This board is typically 2 inches thick.

b. Fibrous glass thermal and acoustical felt, MIL-I-22023, Type III (faced with reinforced Mylar film to protect the board from contaminants such as oil, grease and dirt).

c. Acoustic fire insulation as shown in NAVSEA drawing 803-5184182.

d. Barium sulfate-loaded vinyl sheet conforming to MIL-A-24699, or barium sulfate loaded silicone of equal area density.

e. Sheathing conforming to Federal specification QQ-A-250/3, 0.04 inches thick, perforated with 3/16 inch diameter holes on 3/8 inch centers, staggered.

f. Plastic isolating tape, MIL-I-24391.

g. Fibrous glass tape, MIL-C-20079, Type II, Class 1.

h. Latex adhesive, MIL-A-3316, Class I, Grade A.

i. Epoxy adhesive, MIL-A-24456.

j. Sealing compound, silicone rubber base, TT-S-1543.

k. Tape, duct, NSN 5640-00-103-2254.

l. Aluminum alloy stud, MIL-S-24149/2, Type III, Class 3, plus a compatible carbon steel press-fit cap.

m. Carbon steel stud, MIL-S-24149/1, Type IV, Class 3, plus a compatible carbon steel press-fit cap.

n. Polyimide foam, thermal and acoustic insulation conforming to DOD-I-24688.

o. Acrylic tape, Y9485 manufactured by 3M Co., or equal.

p. Type ″G″ suspended ceiling acoustic panels consisting of Pelican TA-301-PAF acoustic lay-in panels manufactured by Reilly-Benton Company, or equal. Panels are 23 3/4-inches by 47 3/4-inches. They consist of 1-inch of polyimide foam, 0.6 to 0.9 lbs/ft^3 density, adhered to corrugated and perforated aluminum.

q. For surface ships, high transmission loss treatment consists of the following components. An inner layer of fibrous glass sound absorbing felt, either MIL-I-22023, Type II, Class 6 or MIL-A-23054, installed against ship structure. Barium sulfate-loaded vinyl or barium sulfate loaded silicone (3/4, 1, or 1.5 pound per square foot) is installed over the inner layer. An outer layer of acoustical material covers the loaded vinyl or silicone. The outer layer consists of either a 2 inch thickness of MIL-A-23054 perforated hard surfaced fibrous glass acoustical board or MIL-I-22023 Type III fibrous glass thermal and acoustical felt.

r. For submarines, high transmission loss treatment consists of a composite of 1/2-inch layers of polyimide foam conforming to DOD-I-24688 with barium sulfate-loaded vinyl septa and a glass cloth facing conforming to Reilly-Benton TA 301 (TLP-3) or equal. A similar treatment is specified in NUC Specification No. 120569 MA-R2.

635-7.2 INSTALLATION

635-7.2.1 GENERAL INSTALLATION PROCEDURES

1. Surface preparation shall be in accordance with **NSTM Chapter 631, Preservation of Ships in Service (Surface Preparation and Painting)** . Insulation is installed in accordance with NAVSEA drawing 804-5773931.

2. Perforated hard-surfaced fibrous glass board and fibrous glass felt are attached to the ship structure using studs conforming to MIL-S-24149, and press fit caps. Polyimide foam insulation is attached to plane surfaces using carbon steel or aluminum studs and press fit caps, as applicable. Acoustic fire insulation is attached using studs and caps as shown on NAVSEA drawing 803-5184182. Studs are welded to ship structure using a stud gun, where possible. On GRP surfaces, self drilling and self tapping studs are used. In areas that are inaccessible for a stud gun, treatments may be secured to ship structure with adhesive-attached studs in place of welded studs. These studs, as procured, are welded to a base plate of at least 2-inches square, and of the same type metal as the stud. A maximum of 25 percent of the total number of studs required to secure insulation on each plane area bounded by stiffeners or bulkheads may be attached using MIL-A-24456 adhesive. Studs at the edges of acoustic fire insulation shall be placed no more than 3-inches from the edge of the insulation. Studs are not required on flanges or webs where polyimide foam is installed.

3. Acoustic treatments which extend down to the deck shall be protected by a 4-inch by 1/8 inch steel or aluminum coaming, as appropriate, which shall be welded to the deck with a continuous weld, with the treatment installed behind the coaming. On GRP structures, a GRP coaming shall be used.

4. Acoustic treatments, fibrous glass or polyimide foam, installed over unconstrained damping tiles are installed as shown in Figure 635-7-1. The studs, attached to the bulkhead, pass through the damping tile. A maximum of 25 percent of the total number of studs required to secure insulation on each plane area bounded by stiffeners or bulkheads may be attached directly to the damping tiles using adhesive, MIL-A-24456. When acoustic treatments are installed over constrained damping, the studs are welded directly to the constraining layer, provided that an installation of identical design has been subjected and successfully passed the Grade B, Type A high impact shock test of MIL-S-901. If the installation has not been shock qualified, studs shall be welded

to the ship structure in the same manner as when installing acoustic insulation over unconstrained damping. Holes 7/8-inch in diameter shall be cut in the damping tiles and the constraining layer to provide passage for the studs.

5. Installation details pertaining specifically to treatments installed for acoustic absorption purposes, or for transmission loss purposes, are provided below.

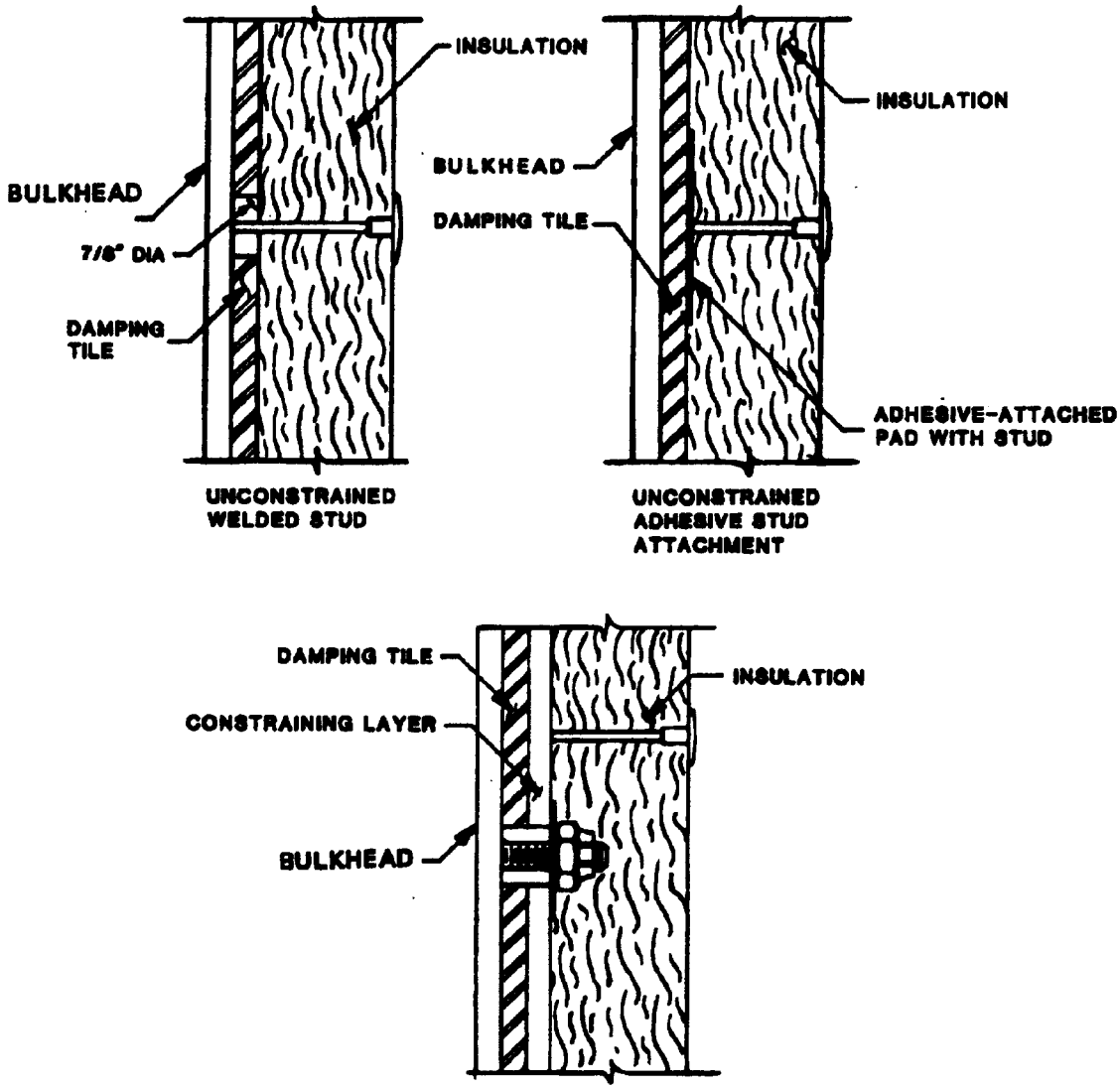

Figure 635-7-1. Treatment Over Unconstrained and Constrained Damping Tile

635-7.2.2 TREATMENTS INSTALLED FOR ACOUSTIC ABSORPTION PURPOSES

1. Perforated acoustical board conforming to MIL-A-23054 or DOD-I-24688, Type II, Class 2 normally is installed on ship structure in dry environments, outside of machinery spaces. Acoustic treatment to be installed in machinery spaces, shops, or other spaces where the insulation may be exposed to oil, water, grease, dirt, or high levels of humidity shall consist of fibrous glass thermal and sound absorbing felt, MIL-I-22023, Type III. Polyimide foam acoustic absorptive or thermal treatment shall not be installed in spaces exposed to oil or high moisture.

2. Where both acoustic absorptive treatment and thermal insulation are specified, only the acoustic absorptive treatment is applied to plane surfaces, and thermal insulation is applied to beams and stiffeners.
3. Polyimide foam with a fibrous glass cloth facing, DOD-I-24688, Type II, Class 1, may be installed on webs and flanges of stiffeners when fibrous glass insulation is installed on plane surfaces.
4. Treatments intended to serve only for acoustic absorptive purposes are applied to plane surfaces only.
5. Treatments installed for acoustic absorptive purposes on vertical surfaces extend from 6-inches above the deck to the overhead, except for the warm side of refrigerated stores spaces, uptake enclosures, magazines, and ammunition handling and ready service spaces, where it extends from deck to overhead. When acoustic fire insulation is installed, it shall extend from deck to overhead.
6. When treatment which is only to serve acoustic absorptive purposes is indicated for compartment bulkheads, doors in those bulkheads shall not be covered except in fan rooms.
7. Where treatment which is only to serve as acoustic absorptive treatment is required on vertical surfaces, the treatment shall be eliminated behind status boards, control or switching panels, or equipment mounted on or against the bulkhead. Treatments installed for acoustic absorptive purposes only shall not be installed in the way of shower stalls, or built-in furniture, except behind berths.
8. Space studs for fibrous glass acoustic absorptive treatments on approximately 12-inch centers, but in no case more than 15-inch centers. Studs shall not be placed more than 6 inches from the edge of the acoustic absorptive treatments. When polymide foam acoustic absorptive treatment is installed, stud spacing shall not exceed 18 inches on plane surfaces, except that studs shall not be more than 12 inches from the edge of the insulation.
9. All seams and edges of faced insulation shall be sealed with fibrous glass tape, MIL-C-20079, Type II, Class 1 using adhesive MIL-A-3316, Class 1, Grade A. All penetrations of the MIL-I-22023, Type III treatment facing, including studs, are to be sealed with an elastomeric sealant. In high traffic and work areas, the facing is to be protected by perforated aluminum sheathing, extending from the deck to a height of 4 feet. Plastic isolating tape, MIL-I-24391, is to be installed between the mounting brackets and the aluminum sheathing whenever the materials are dissimilar.
10. Type ″G″ suspended ceiling acoustic panels are installed with a sheathing grid system in accordance with NAVSEA drawing 804-5959201. The use of Type G treatment does not negate the requirements for thermal insulation.
11. Telephone booths with acoustic absorptive treatments generally are the wall-type, constructed without doors, and closed on the top, back, and sides. The booths are constructed in accordance with NAVSEA drawing 804-1632788.

635-7.2.3 TREATMENTS INSTALLED FOR TRANSMISSION LOSS PURPOSES. The installation details for treatments which are to serve acoustic transmission loss purposes are more rigorous than those for treatments which serve only acoustic absorptive purposes. For transmission loss treatments to perform to their full potential, they must be installed to obtain full (essentially 100 percent) coverage of the surfaces, including beams and stiffeners with no exceptions made for interferences. Care must be taken to fully seal the layers of treatments in the way of penetrations through the treatments. Examples of this include to fully seal around pipes, foundations and structures that pass through the treatment. Additionally, the coverage of high transmission loss treatments must generally extend somewhat beyond the surfaces which are indicated to be treated.

1. The inner layer of fibrous glass board installed against ships structure as part of surface ship high transmission loss treatment may consist of MIL-I-22023, Type II, Class 6, 2 inches thick. For improved transmission loss performance, the inner layer may consist of MIL-A-23054, 2 inches thick. The outer layer of fibrous

glass shall consist of 2 inch thick MIL-A-23054 in dry environments, outside of machinery spaces, shops, and other locations where there is exposure to oil, grease, dirt, water, or high levels of humidity. In environments exposed to these contaminants, the outer layer shall consist of 2 inch thick MIL-I-22023, Type III.

2. Where both acoustic transmission loss treatment and thermal insulation are specified, only acoustic transmission loss treatment is applied.

3. Treatments installed for transmission loss purposes shall cover all stiffeners as well as plane surfaces.

4. Treatments installed for transmission loss purposes on vertical surfaces shall extend fully from the deck to the overhead.

5. On bulkheads with treatments installed for transmission loss purposes, doors shall also be treated.

6. Surfaces installed with treatments for transmission loss purposes shall be treated behind all status boards, control and switching panels, bulkhead and overhead mounted equipment, piping, cabling, and built in furniture and stalls.

7. Space studs for high transmission loss treatments on no more than 12-inch centers. Studs at edges shall not be placed more than 6 inches from the edge of the acoustic treatment.

8. Seams between adjacent sections of loaded vinyl or silicone are to overlap a minimum of 3-inches. All seams in each loaded vinyl or silicone layer of the transmission loss treatment are to be sealed with duct tape.

9. Where no other insulation is specified at the boundary of a transmission loss treatment, the transmission loss treatment shall be extended for 12-inches beyond the indicated boundary on bulkheads and overheads. In those instances where other insulation is specified at the boundary of transmission loss treatments, the loaded-vinyl or silicone sheet shall be extended a minimum of 12-inches beyond the indicated boundary on bulkheads and overheads, as shown on Figure 635-7-2.

10. All penetrations, such as studs, shall be carefully sealed with sealing compound, TT-S-1543, if gaps exist after installation. Typical transmission loss treatments on plane bulkheads and around beams are shown in Figure 635-7-3 and Figure 635-7-4

11. Carefully seal all seams and exposed edges of the transmission loss treatment using tape, MIL-C-20079, secured with adhesive, MIL-A-3316. Carefully seal all penetrations, including studs, with an elastomeric sealant. Figure 635-7-4 shows typical submarine transmission loss treatments, using materials specified in NUC Specification No. 120569 MA R2.

635-7.2.4 ACOUSTIC TREATMENT MAINTENANCE. Painting of acoustic treatments is to be minimized to the maximum extent possible, since paint buildup on the facing or plugging the holes in the perforated sheathing or facing can change the acoustic performance properties of the treatment. Where painting is required, the paint should be brushed or sprayed on in thin coats, exercising care to avoid plugging or bridging the holes in the sheathing or facing.

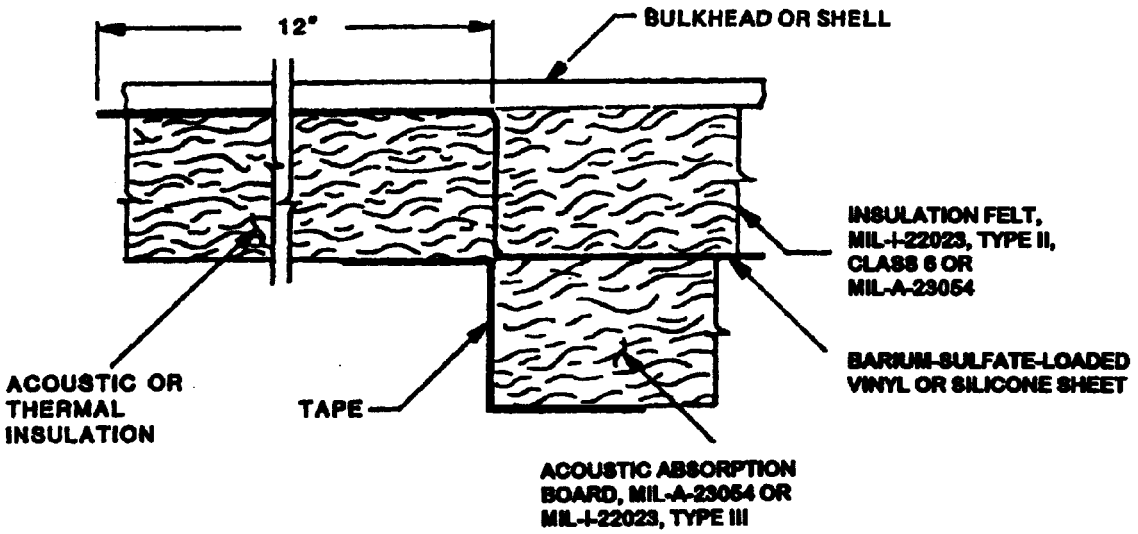

Figure 635-7-2. Transmission Loss Treatment Butted to Thermal or Acoustic Absorption Treatment

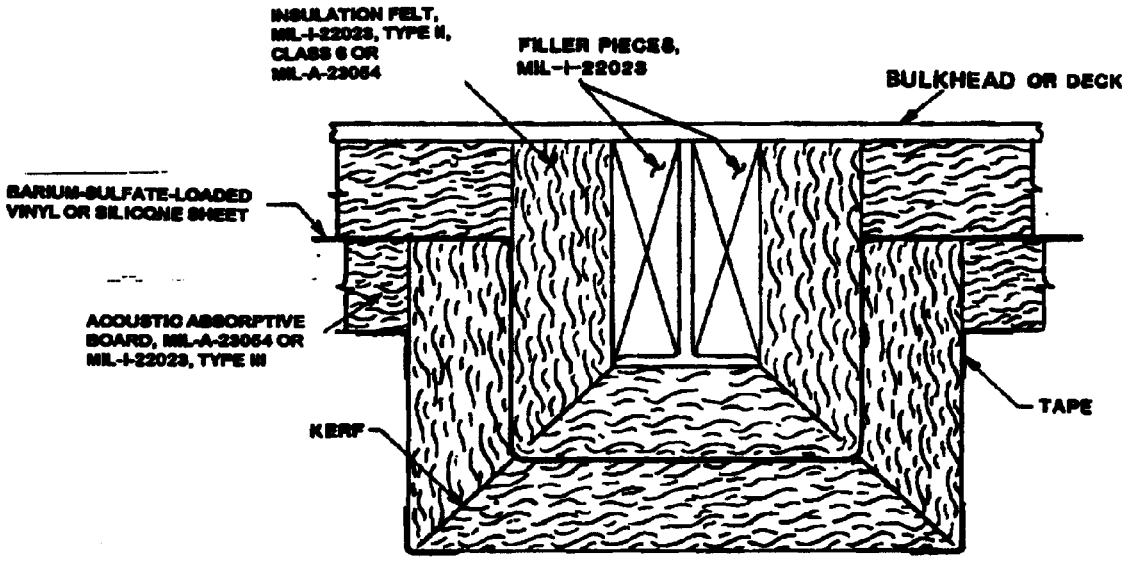

TRANSMISSION LOSS TREATMENT AROUND BEAMS AND STIFFENERS

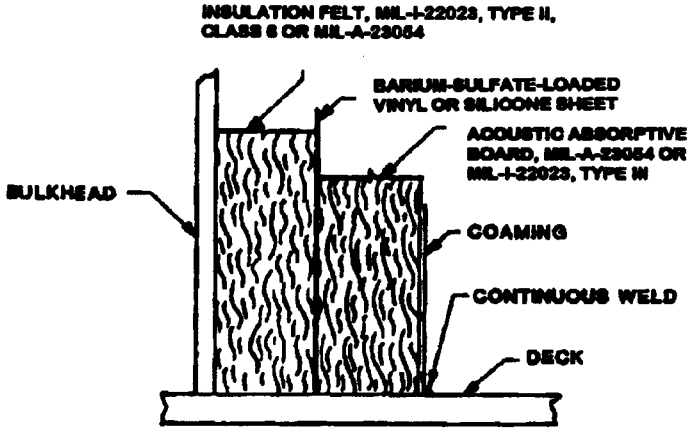

TRANSMISSION LOSS TREATMENT ON BULKHEAD

Figure 635-7-3. Typical Transmission Loss Treatments

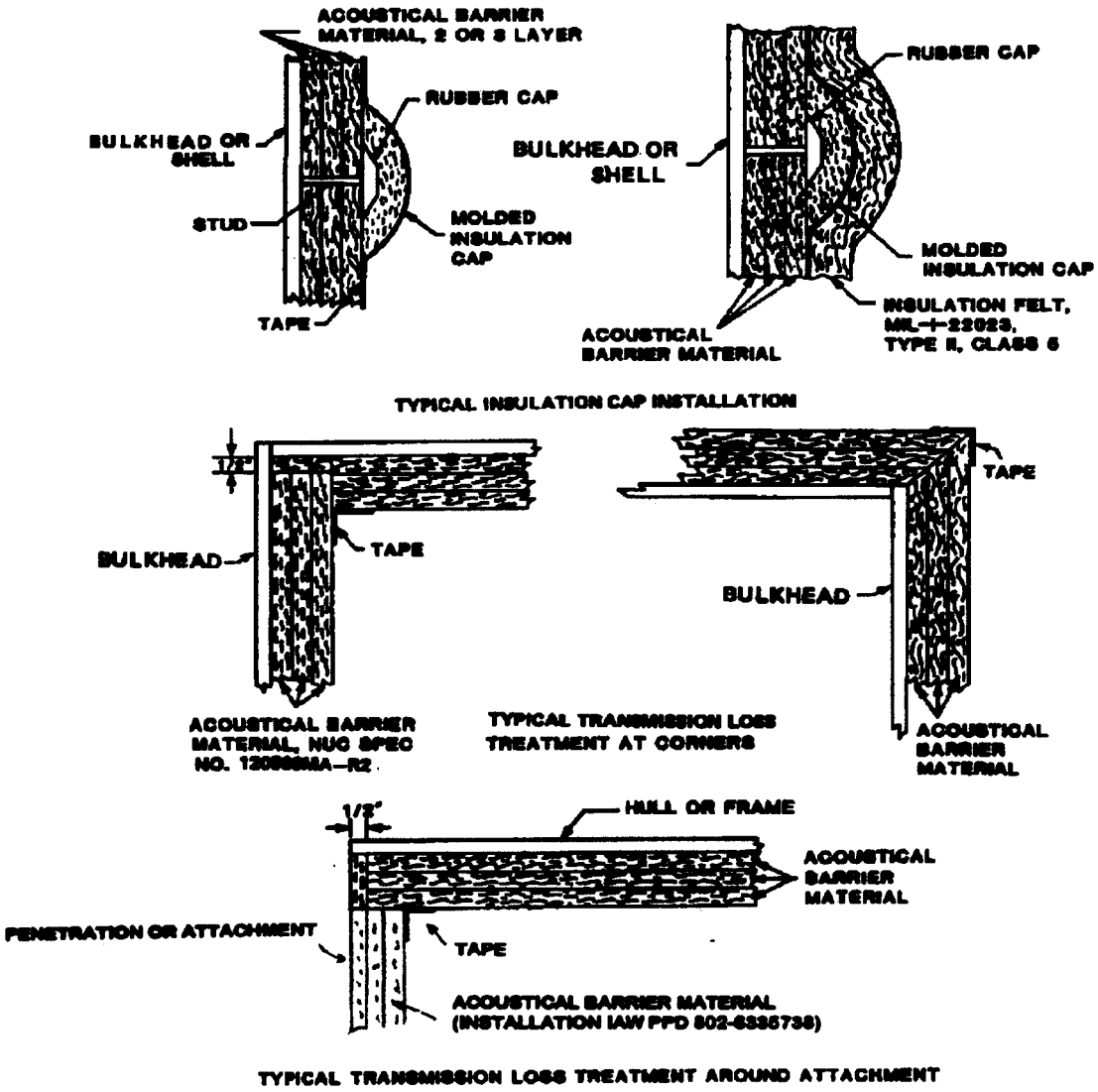

Figure 635-7-4. Typical Submarine Transmission Loss Treatments

635-7.2.5 INSPECTION. All acoustic treatment will be inspected annually (or during post-overhaul periods of SSN/SSBN submarines) for damage. Immediate action shall be taken to repair all damage, including that considered as minor, since the effectiveness of many acoustical treatments depends on the maintenance of their integrity.

SECTION 8.

ACOUSTIC LINING AND LAGGING TREATMENTS FOR DUCTS

635-8.1 ACOUSTIC LINING FOR DUCTS

635-8.1.1 APPLICATIONS. Acoustic lining of ducts is installed as necessary to meet the space noise criteria for each particular ship. Acoustic lining has absorptive properties which attenuate airborne noise as it propagates

through a duct system from a noise source to various terminals. In addition, some acoustic lining has transmission loss properties which attenuate noise propagating through duct walls into or from a space. Acoustic lining may be installed at locations throughout ducting systems as needed.

635-8.1.2 MATERIALS. The standard acoustic duct lining consists of a sound-absorbing blanket protected by a perforated sheathing or a sound-absorbing board with a factory bonded perforated facing.

a. For round or flat oval ducts, the typical acoustic lining consists of a fibrous-glass blanket conforming to MIL-I-22023 or a polyimide foam panel conforming to DOD-I-24688.

b. For rectangular ducts, the typical acoustic lining consists of a fibrous glass blanket conforming to MIL-I-22023, a perforated hard surface fibrous glass acoustical absorption board conforming to MIL-A-23054, or a polyimide foam panel conforming to DOD-I-24688.

c. The perforated sheathing is typically 0.04-inch thick aluminum, perforated with 3/16-inch-diameter holes on 3/8-inch centers, conforming to Federal Specification QQ-A-250/8.

d. Adhesive, MIL-A-3316, Class 1, is used for bonding fibrous glass cloth to unfaced fibrous glass insulation or unfaced polyimide foam insulation. It is also used for sealing the edges of, and bonding fibrous-glass tape to the joints of fibrous-glass board and polyimide foam panels.

e. Adhesive, MIL-A-3316, Class 2, is used to attach fibrous glass and polyimide foam insulation to metal surfaces.

f. Fibrous glass cloth, MIL-C-20079, Type I, Class 3, is used as lagging cloth and facing cloth for the fibrous glass and polyimide foam insulation blankets.

g. Fibrous glass tape, MIL-C-20079, Type II, Class 1, is used to seal joints between both faced fibrous glass boards and unfaced fibrous glass blankets as well as faced polyimide foam panels, DOD-I-24688.

h. Mylar vapor film and cloth, MIL-Y-1140, Form 4, Class C, wrapped loosely with 0.5 mil Mylar film.

i. Duct tape, NSN 5640-00-103-2254.

635-8.1.3 INSTALLATION. Acoustic lining is installed in ducts, where required, in accordance with details shown on NAVSEA drawing 804-5773932.

1. Acoustic lining is usually installed homogeneously throughout an entire duct section. In unusual cases only a portion of the duct run is lined.

2. Treatment is installed in one of the three basic duct shapes, (round, rectangular, or flat oval) in a similar manner. The fibrous glass or polyimide foam blanket is secured between the perforated metal liner and the duct wall by a rivet connection between the metal liner and the duct, at the ends of the duct. Figure 635-8-1 shows the treatment for round and rectangular duct sections.

3. When the ducting draws air for which there is an expectation that the air might become contaminated with oil, grease, or dirt in aerosol form, or very high levels of humidity, an internal vapor barrier is required. Where an internal vapor barrier is required, the perforated sheathing is first wrapped with thermal and acoustical insulation, MIL-I-22023, Type III. Alternatively, the perforated aluminum may be wrapped with a layer of 0.5 mil Mylar and a layer of fibrous glass blanket type insulation, MIL-I-22023, Type II, Class 3.

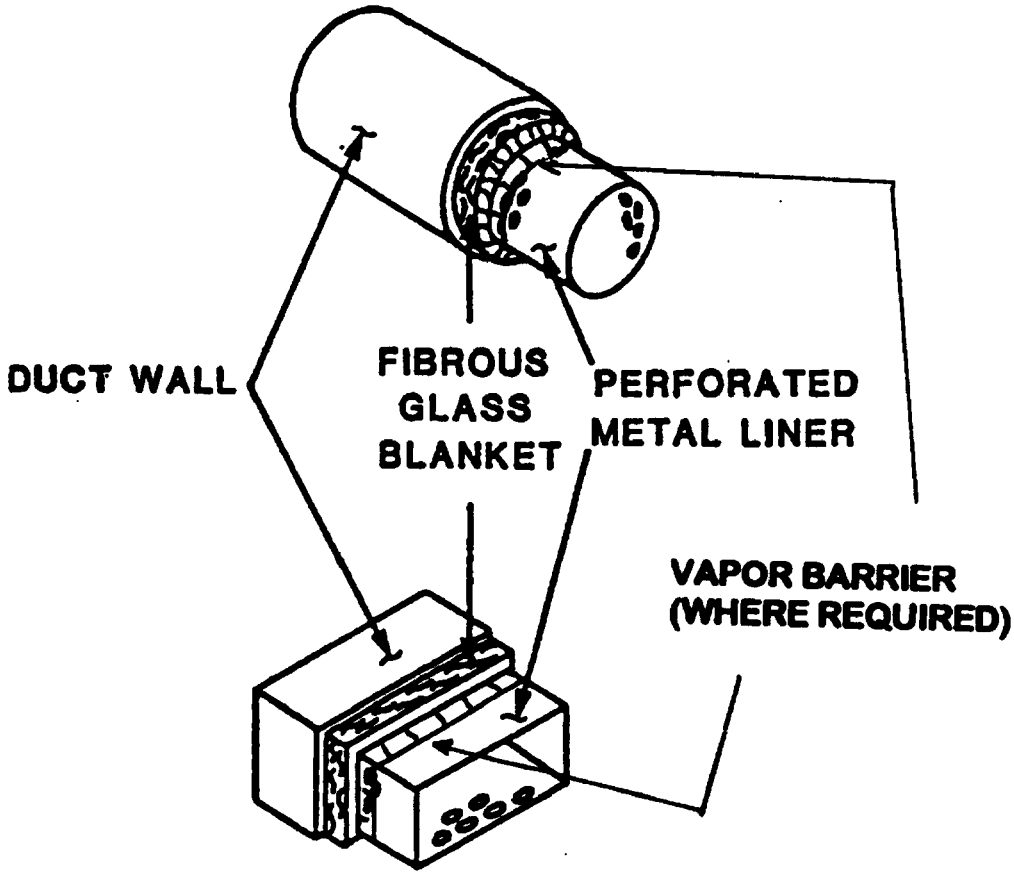

Figure 635-8-1. Typical Acoustical Treatment for Round and Square Ducts

NOTE

Polyimide foam is not authorized for use as an acoustic lining where a vapor barrier is required.

4. The acoustic lining is faired into a flange that is used to connect the individual duct sections. Figure 635-8-2 shows a typical arrangement at the flange.

5. Any overlapping of perforated metal is lapped in the direction of airflow to eliminate sharp edges that will produce non-laminar flow, resulting in aerodynamic noise.

6. Individual duct sections are flanged and bolted together. A gasket is inserted between the flanges and arranged so that the gasket does not protrude into the airstream.

7. The interface of two duct sections may be an interface between acoustic-to-acoustic insulated sections or acoustic-to-thermal insulated sections, as shown in Figure 635-8-3.

8. Thermal insulation, lagging cloth, and adhesive are used to construct the soft patch at the flange.

9. In unusual circumstances, a partial treatment may be required within a duct section. If so, the insulation material is faired to the duct as shown in Figure 635-8-4.

10. Typical installations of materials around bolted access covers are shown in Figure 635-8-5.

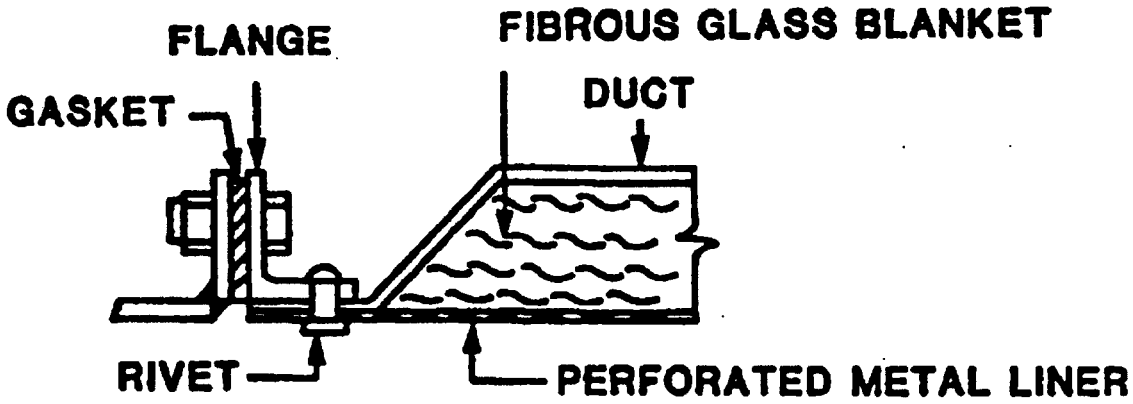

Figure 635-8-2. Typical Flange Connection

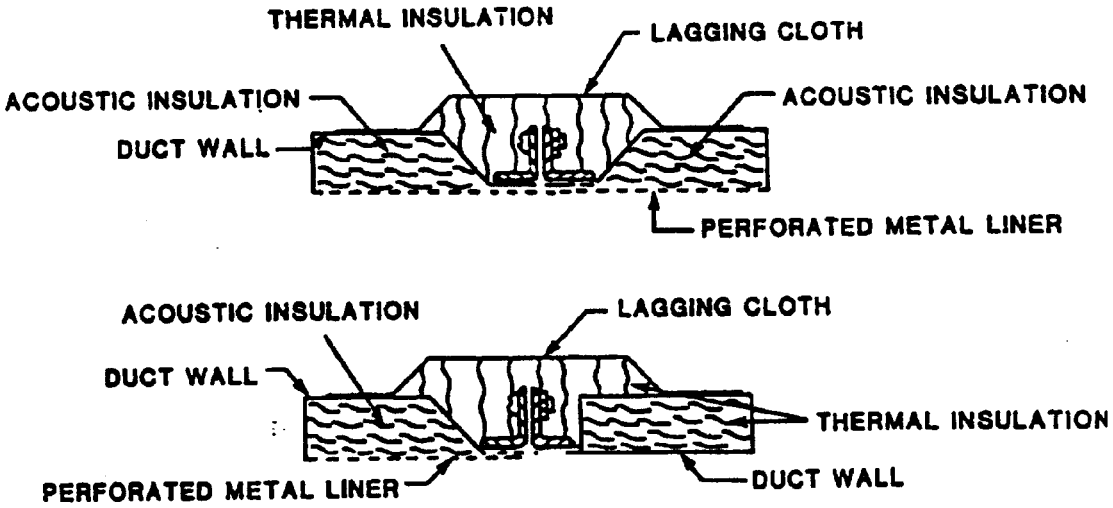

Figure 635-8-3. Treatment Between Insulated Flanges, Acoustic-To-Thermal Insulation (Bottom), Acoustic-To-Acoustic Insulation (Top)

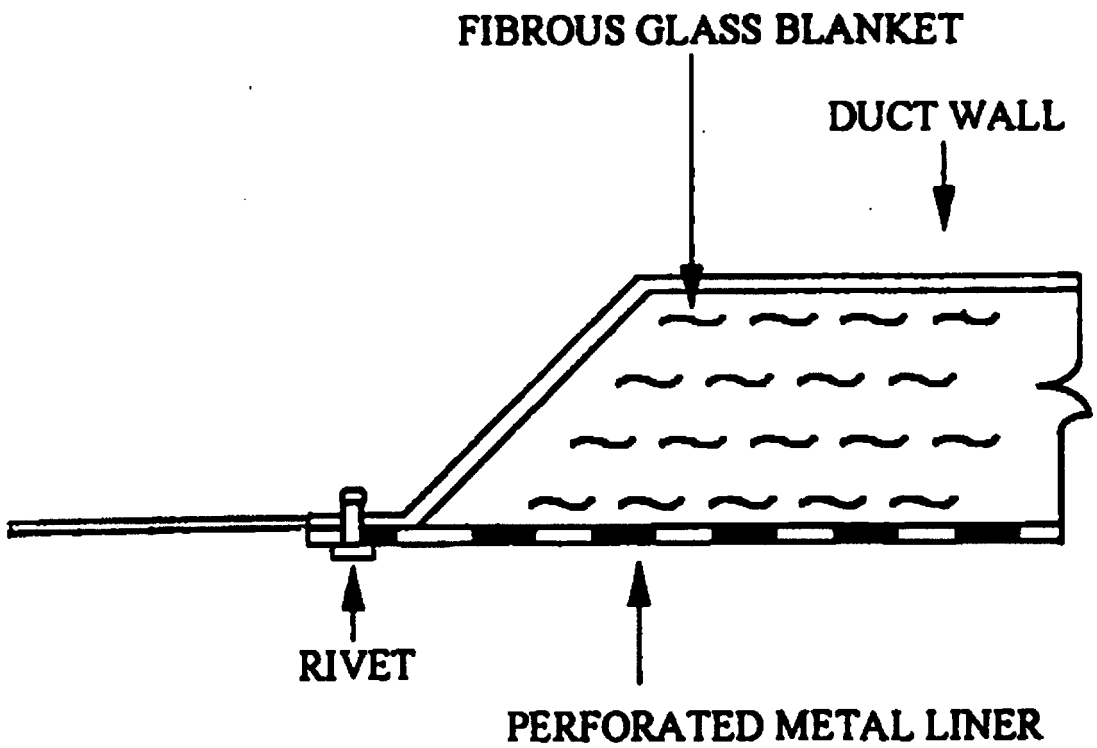

Figure 635-8-4. Insulation Fairing Detail for Partial Treatment of Duct

11. The following method is sometimes used to install acoustic lining in rectangular ducts with low air velocities (less than 2000 feet per minute). The inner surfaces of the duct are covered with pre-cut pieces of perforated acoustic board (MIL-A-23054) embedded in the adhesive (MIL-A-3316). The acoustic board is arranged so that the perforated facing is exposed to the air flow.

12. For most applications, acoustic lining is installed by first bending and riveting a sheet of perforated aluminum to form a liner sheathing of the desired size and shape. Next, a vapor barrier is wrapped around the sheathing, if necessary. An acoustic insulation blanket is then wrapped around the perforated sheathing and is secured temporarily with tape. This assembly is finally inserted into the end of the duct section.

635-8.1.4 INSPECTION. Acoustic duct lining is difficult and inconvenient to inspect, except when routine maintenance is being performed at an access cover plate location. At every opportunity the treatment should be inspected for damage to the lining, including contamination by dust, dirt, or oily grime, which will compromise its effectiveness.

635-8.2 ACOUSTIC LAGGING TREATMENT FOR DUCTS

635-8.2.1 APPLICATIONS. Acoustic lagging treatments are required to attenuate the transmission of sound through duct walls. Acoustic lagging treatments are applied to ducts with high internal noise levels when they penetrate noise critical spaces. Acoustic lagging treatments are also applied to some ducts which pass through extremely noisy spaces. This is required to prevent high-level noise from being propagated to other compartments via the duct system.

635-8.2.2 MATERIALS. Two standard treatments, double wall and barium sulfate-loaded vinyl or silicone septum lagged, are commonly used. The acoustic materials described in paragraph 635-8.1.2 are also used as acoustic lagging treatment components, in addition to the components listed below. Lead-loaded vinyl materials are prohibited.

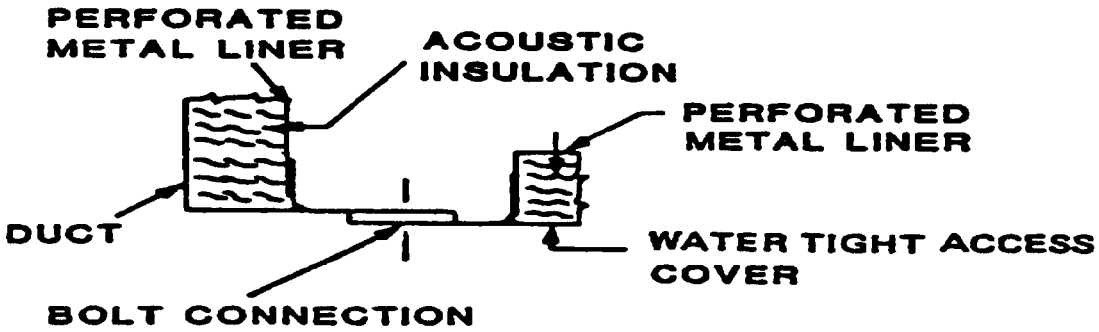

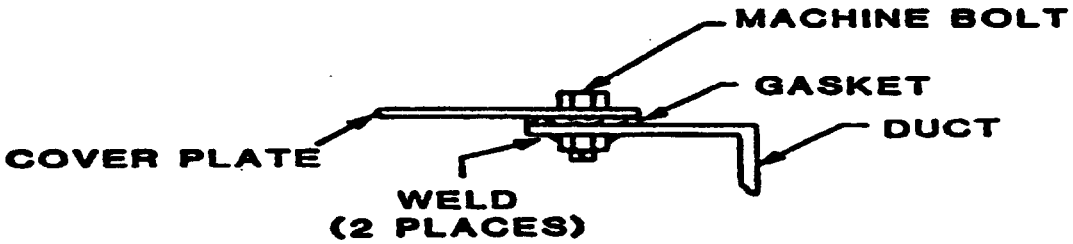

TYPICAL CONNECTION OF COVER PLATE SECURED BY WELDED NUTS

Figure 635-8-5. Typical Installation Around Bolted Access Cover

a. Barium sulfate-loaded vinyl per MIL-A-24699 or barium sulfate loaded silicone.

b. Sheathing, USSG No. 22 (minimum), ASTM A167, Type 304, No. 2B finish or other, such as galvanized sheet steel, USSG No. 22 (minimum), and ASTM A526, coating designation G 115.

c. Vapor barrier coating, MIL-C-19565, for use on cloth facing or lagging cloth of fibrous glass insulation.

635-8.2.3 INSTALLATION. Acoustic lagging treatment is installed on ducts, where required, in accordance with details shown on NAVSEA drawing 804-5773932.

1. The double-wall treatment is applied outside the duct as shown in Figure 635-8-6. Fibrous glass, MIL-I-22023, or polymide foam, DOD-I-24688, is wrapped around the duct and sheathed with a solid enclosure of CRES, sheet steel, or sheet aluminum as required.

2. The barium-sulfate-loaded vinyl or silicone lagged treatment is applied outside the duct, as shown in Figure 635-8-7. Fibrous glass, MIL-I-22023, or polyimide foam, DOD-I-24688, is wrapped around the duct.

3. The acoustic lagging insulation is butt-jointed and taped before the loaded vinyl or silicone layer is wrapped with overlapping seams to prevent flanking path degradation. A 2- to 4-inch overlap is commonly used. The loaded vinyl or silicone layer is lagged with a fibrous-glass cloth lagging, MIL-C-20079, and is vapor barrier protected, MIL-C-19565.

4. The effectiveness of both acoustic lagging treatments is dependent upon complete sealing of all sound transmission paths. All seams in the transmission loss treatment are to be sealed with tape. Any penetration, such as studs, shall be sealed with sealing compound, TT-S-1543.

635-8.2.4 INSPECTION. Acoustic lagging treatments are severely compromised by structural flanking paths and void areas between material layers. Therefore, inspection shall be quite thorough to examine new treatment sections for flanking paths at the joint sections and between double duct walls. As discussed for acoustic lining in 635-8.1.4, the acoustic materials shall be inspected for damage and contamination by dust, water, or oily grime.

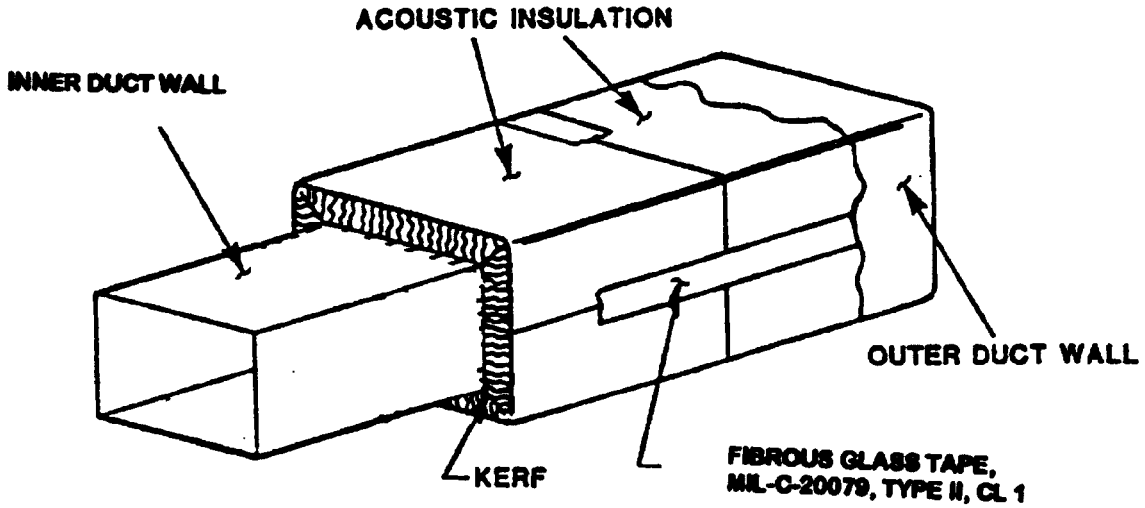

Figure 635-8-6. Double-Wall Transmission Loss Treatment

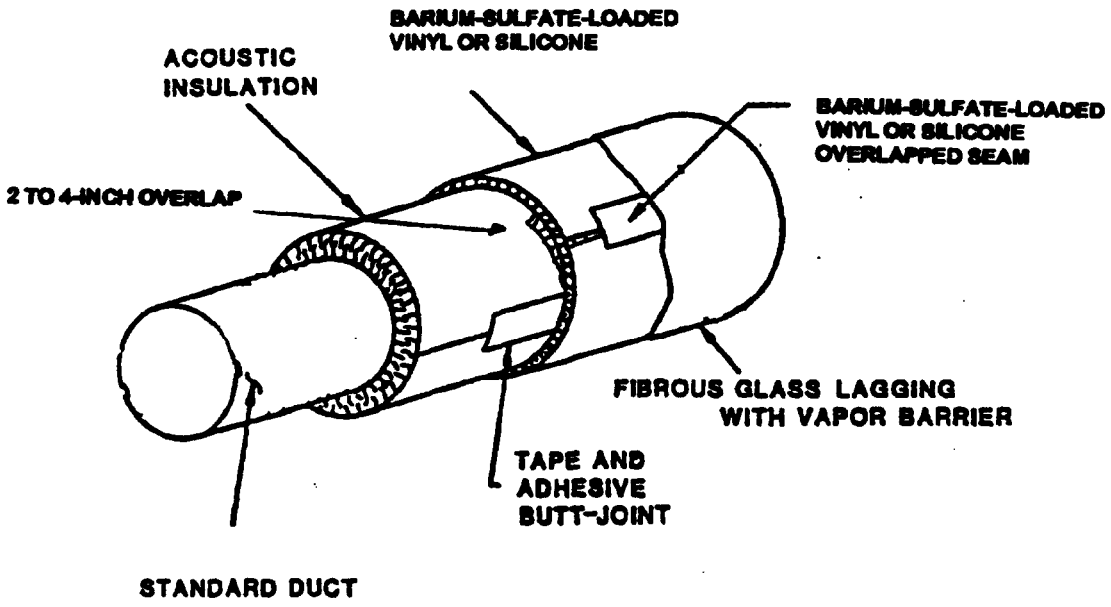

Figure 635-8-7. Barium-Sulfate-Loaded Vinyl or Silicone Lagged Transmission Loss Treatment

SECTION 9.

FIRE INSULATION FOR COMPARTMENTS

635-9.1 GENERAL

635-9.1.1 SCOPE. Compartment fire insulation is the term given to certain high temperature materials applied to load and non-load bearing shell, bulkheads, overhead, and structural members of those components in order to provide protection against flame impingement.

635-9.1.2 MATERIALS. Fire insulation for use on Navy surface ships consists of high temperature insulation. Materials shall be as follows, or equal:

a. Fire insulation - Thermal Ceramics Structo-GardR FB, Imi-Tech SOLIMIDE TM Firesafe, or equal.

b. Thermal fire insulation - Fire insulation with a fibrous glass cloth facing of a type and installed in a manner identical to that required for fibrous glass thermal insulation board, MIL-I-742, Type I.

c. Acoustic absorptive treatment - Fire insulation with a fibrous glass waffle sheet and a perforated glass cloth facing of a type and installed in a manner identical to that required for acoustic absorptive board, MIL-A-23054.

d. Fibrous glass insulation felt, MIL-I-22023, Type II, Class 6.

e. Transmission loss treatment - Moisture membrane, consisting of a Mylar-faced glass cloth as shown on NAVSEA drawing 803-5184182.

f. Sheathing, consisting of solid or perforated aluminum, MIL-S-12875, Type II, Class B.

g. Plastic isolating tape, MIL-I-24391.

h. Fibrous glass tape, MIL-C-20079, Type II, Class 1.

i. Latex adhesive, MIL-A-3316, Class 1, Grade A.

j. Epoxy adhesive, MIL-A-24456.

k. CRES or carbon steel studs and caps, for use on steel structures. Bi-metallic studs and CRES caps for use on aluminum structures. Studs and caps shall be in accordance with NAVSEA drawing 803-5184182.

l. CRES or ceramic spacers as shown on NAVSEA drawing 803-5184182.

635-9.1.3 INSTALLATION. Surface preparation shall be in accordance with **NSTM Chapter 631, Preservation of Ships in Service (Surface Preparation and Painting)** . Insulation thickness shall be in accordance with ship specifications as amplified by NAVSEA drawing 803-5184182. Minimum thickness of fire insulation to be installed shall be: one layer thickness on plane surfaces; double layer thicknesses around beams, stiffeners, web frames, girders and stanchions. Both sides of the fire zone bulkheads shall be treated with one layer thickness of fire insulation. When fire insulation is specified for installation on surfaces that normally would require acoustic or thermal insulation, acoustic fire insulation or thermal fire insulation shall be installed.

635-9.1.3.1 Fire Insulation. All fire insulation shall be impaled on studs that are welded to the ship structure. In areas that are inaccessible to a stud gun or manual welding, studs attached to a perforated pad may be bonded to the ship structure using adhesive, MIL-A-24456, or screw type studs may be used for glass reinforced plastic (GRP). Self drilling and tapping studs shall be installed using approximately 10-15 pounds of torque. The total number of adhesive-attached or screw type studs shall be kept to an absolute minimum, but in no case shall exceed 25 percent of the total number of studs required to secure insulation on each plane area bonded by stiffeners or bulkheads, except for certain ships, such as minesweepers. Stud spacing on plane surfaces shall not exceed 12 inches, except that studs shall be located within 3 inches of any seam in the fire insulation. Studs are normally positioned on the center of beam and stiffener webs. However, a stud shall be positioned within 3 inches of the end of the insulation wrap-around. Deep webs may require additional studs on the lower (flange) side of the web to ensure that the fire insulation is held securely against the beam and filler pieces. Additional studs shall be installed if the web is 12 inches or greater in depth. Stud spacing along the length of beams and stiffeners shall be 12 inches maximum, except that studs shall be positioned within 3 inches of any seam or the insulation butt end.

635-9.1.3.2 Butts and Seams. All butts and seams in the fire insulation shall be covered with fibrous-glass tape, MIL-C-20079, Type II, Class 1, and secured with adhesive, MIL-A-3316, Class 1, Grade A.

635-9.1.3.3 Beams and Stiffeners. Fire insulation is installed on beams and stiffeners as shown in Figure 635-9-1. The insulation is installed with one continuous wrap-around of the web and flange to form a boxed-in configuration. For fire insulation configurations thicker than 1 inch that contain fibrous glass or polyimide foam base layers, kerfing of the base layer is allowed only when necessary. Fibrous glass filler pieces (MIL-I-22023, Type II, Class 6) are installed on beam and stiffener webs under the fire insulation.

635-9.1.3.4 Penetration Sleeves. Penetration sleeves installed in the webs of beams and stiffeners are treated as shown in Figure 635-9-2. Fire insulation is used as filler pieces around the penetration sleeve, and shall extend for a minimum of 2 inches on either end of the sleeve.

635-9.1.3.5 Protective Coaming. Fire insulation is normally installed on plane surfaces first. Coverage shall extend from the deck to the overhead on all vertical surfaces. A protective coaming is welded to the deck, using a continuous weld, and the fire insulation is installed behind the coaming. On spaces that do not have decks, the

bottom edge of the fire insulation shall be protected by a boundary angle in areas where the insulation is subject to damage. Where the insulation is not subject to damage, the edge may be covered with fibrous glass tape.

635-9.1.3.6 Beam and Stiffener Installation. After installing fire insulation on plane surfaces, insulation is applied (wrapped) around beams and stiffeners. On beams and stiffeners that have a shallow web, it may be necessary to wrap the beam or stiffener first in order to provide clearance for the stud gun when welding studs to the web.

635-9.1.3.7 Vertical Stiffeners. In cases where vertical stiffeners under transverse web frames are used as stanchions for bulkheads, stiffeners and both sides of the bulkhead shall be covered with fire insulation. The insulation is to extend for the full deck height, and for 12 inches on either side of vertical stiffeners, in accordance with Figure 635-9-3. The upper 12 inches of both sides of the bulkhead shall also be covered with fire insulation.

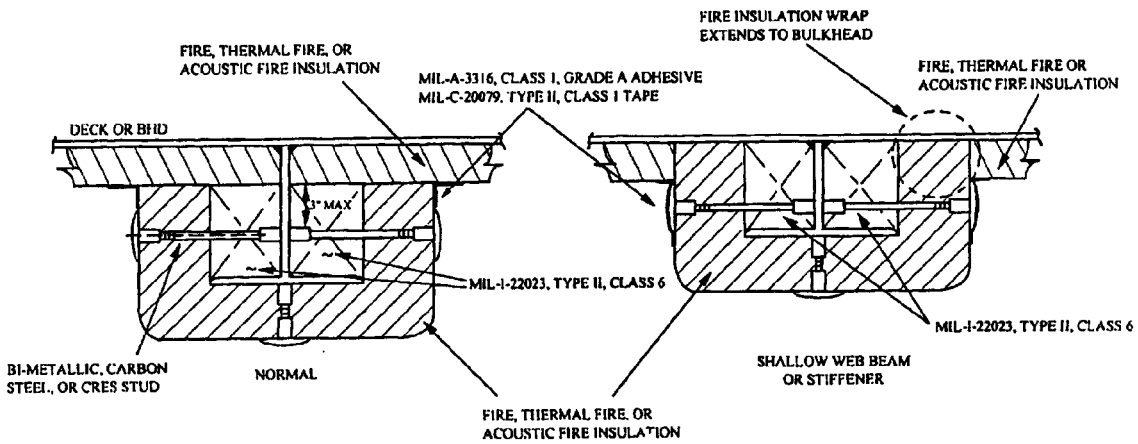

Figure 635-9-1. Insulation Beam Wrap

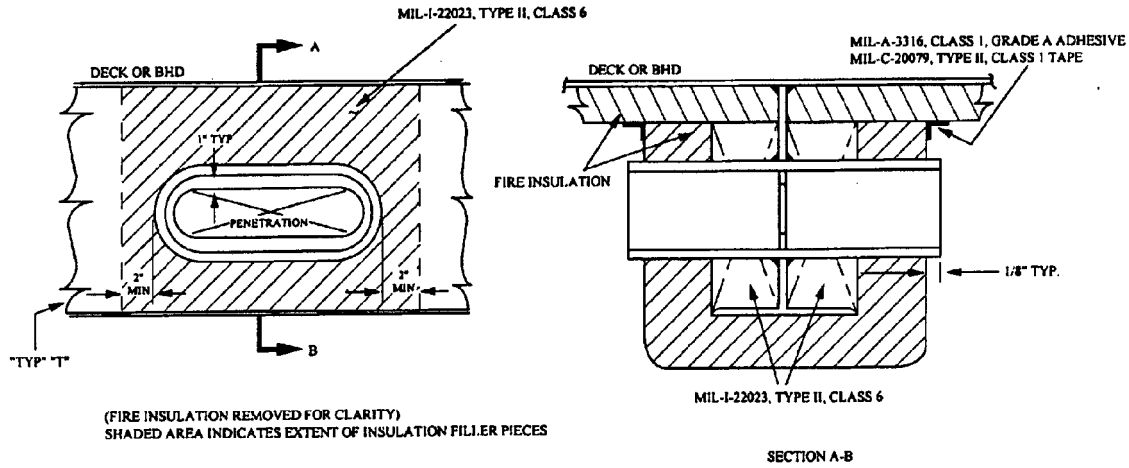

Figure 635-9-2. Penetration Sleeve

635-9.1.3.8 Pipe Stanchions. When pipe stanchions are used as supports for nonstructural bulkheads, fire insulation is installed to cover the stanchion and a minimum of 12 inches on either side of the stanchion, on both sides of the bulkhead.

WARNING

Substitutions of thermal insulation for thermal fire insulation, or acoustic insulation for acoustic fire insulation are categorically disallowed.

635-9.1.4 INSPECTION AND REPAIR. All fire insulation will be periodically inspected for damage. Immediate action shall be taken to repair all damage, including that considered as minor, since the effectiveness of fire insulation is dependent upon maintenance of its integrity. Damaged sections shall be removed and replaced with new fire insulation, using the procedures outlined in this section.

635-9.1.5 OIL, WATER, OR VAPOR PROTECTION. When fire and acoustic or thermal insulation treatments are to be installed in areas subject to exposure, oil, water, or vapors, they shall be treated as follows:

1. When there is no requirement for acoustic fire insulation, the outer surface of the treatment shall be coated with one coat of MIL-C-19565.

2. Where acoustic fire insulation is specified, the outer surface of the composite shall consist of fire insulation covered with a glass cloth and Mylar sheet facing as shown on NAVSEA drawing 803-5184182, installed with the glass cloth side out. The glass cloth and Mylar sheet facing shall be factory-bonded to the insulation with a fire-retardant adhesive. All seams and edges of the faced insulation shall be sealed with fibrous-glass tape, MIL-C-20079, Type II, Class 1, and secured with adhesive, MIL-A-3316, Class 1. All penetrations of the facing, to include studs, shall be sealed with elastomeric sealing compound, TT-S-1543.

3. In high traffic and work areas, the glass-cloth and Mylar facing shall be protected by perforated aluminum sheathing, MIL-S-12875, Type II, Class B. The aluminum sheathing shall extend up from the deck for a height of 4 feet, shall be installed with a factory edge at the top, and shall have a bead at the top and bottom. A 2-inch-wide strip of fibrous glass tape shall be applied to the glass cloth facing where the aluminum sheathing would rest against the facing, positioned such that 1 inch of tape extends above the top of the aluminum sheathing. The aluminum sheathing shall be secured to the deck coaming with solid CRES rivets. Dissimilar metals shall be separated by two layers of plastic isolating tape, MIL-I-24391. When fire insulation treatments are installed in high traffic and work areas, solid aluminum sheathing shall be installed.

4. Figure 635-9-4 shows how fire insulation faced with glass cloth and Mylar and covered with aluminum sheathing is installed around beams or stiffeners. CRES or ceramic spacers, as shown on NAVSEA drawing 803-5184182, are available for some types of bi-metallic studs. The spacers prevent the sheathing from being pushed in and compressing the insulation around the studs. If spacers compatible with the bi-metallic studs are not available commercially, acceptable substitutes may be fabricated from CRES 304 tubing cut to the proper length. Tubing diameter shall be the minimum necessary to fit over the stud.

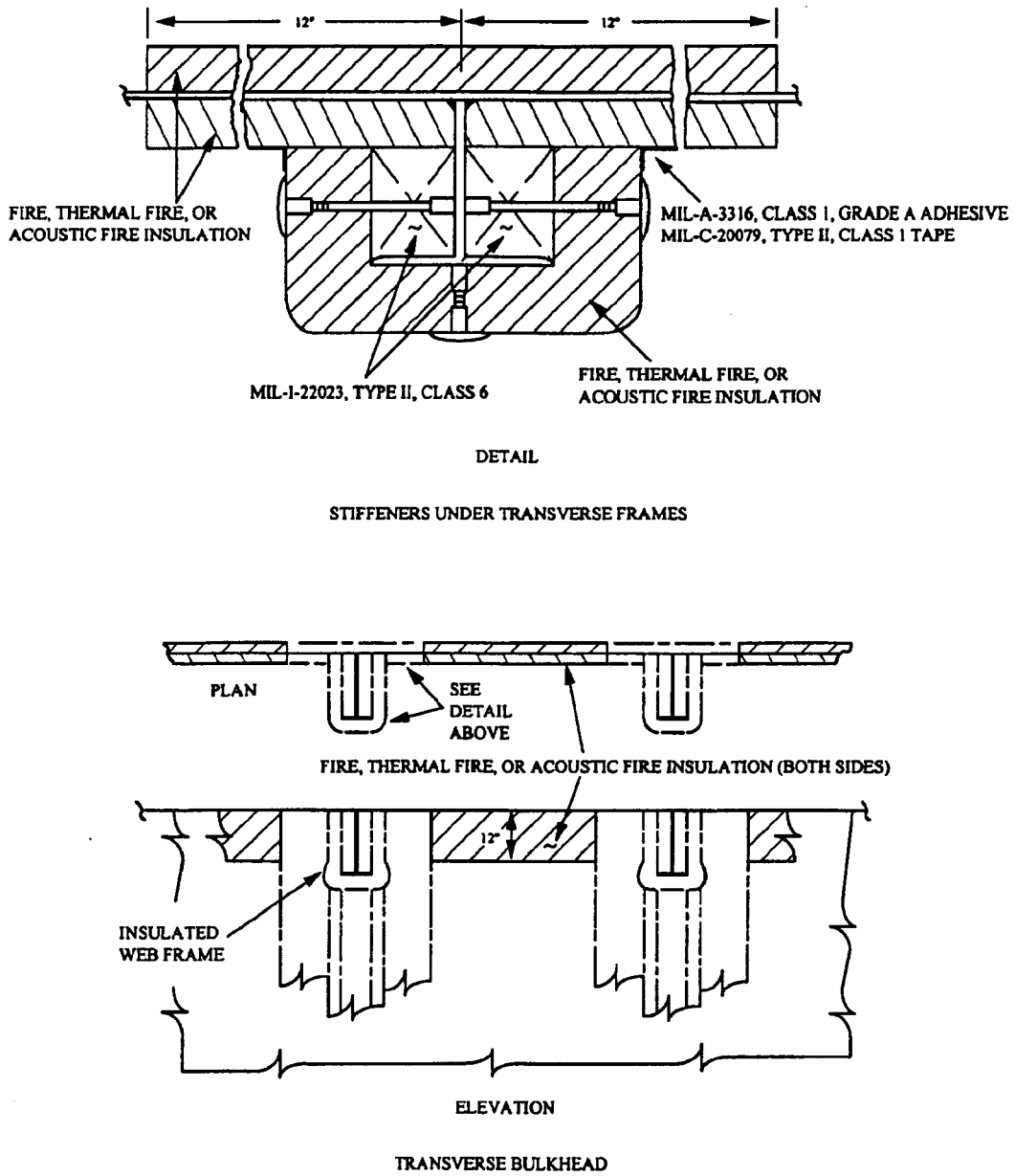

Figure 635-9-3. Installation of Fire Insulation on Vertical Stiffeners Under Transverse Web Frames and on Transverse Bulkheads

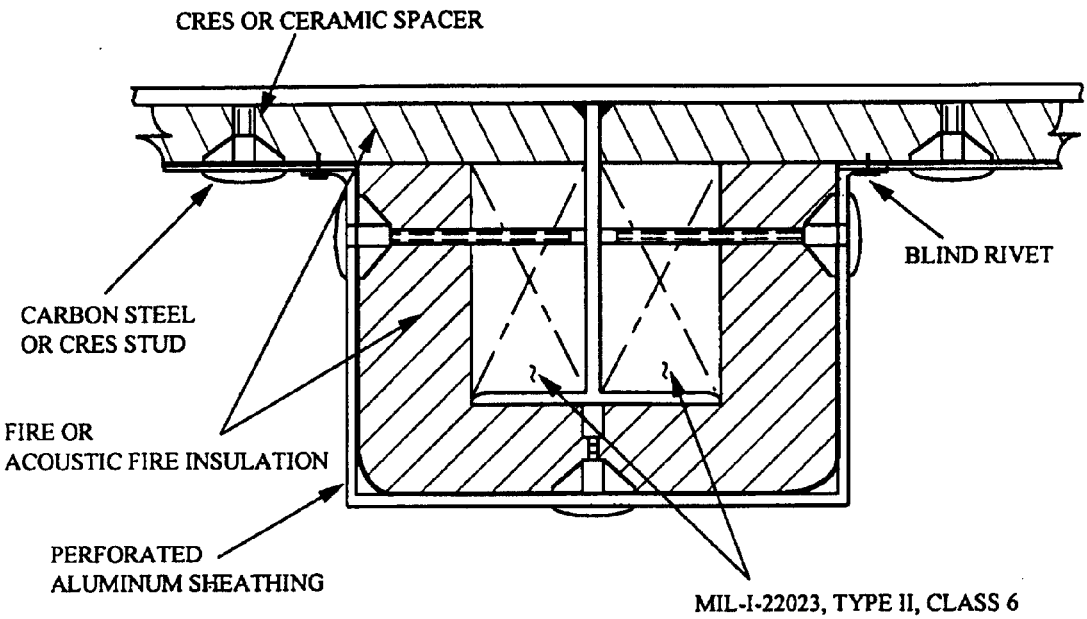

Figure 635-9-4. Sheathing Around Beam

635-9.1.6 DOORS AND HATCHES. Steel doors and hatches are normally installed in aluminum bulkheads where fire protection is required. The door and hatch frames are bolted to the aluminum bulkheads. Fire insulation is installed to completely cover the joint between the bulkhead and the frame as shown in Figure 635-9-5. Attach the bounding angle bar covering the edge of the fire insulation to the bulkhead with a continuous weld, to ensure that there are no openings that may provide a heat path behind the fire insulation.

635-9.1.7 BULKHEAD PENETRATIONS. Fire insulation shall be carefully fitted around all bulkhead penetrations. Where multiple penetrations are located in spaces requiring fire insulation, void spaces shall be packed with fire insulation and secured with adhesive, MIL-A-3316, Class 1, Grade A. Cables, pipes, or other systems that penetrate the bulkhead or deck shall be wrapped with two layers (2-inch minimum) fire insulation to extend a minimum of 12 inches from the bulkhead or deck, and secured with steel bands. Figure 635-9-6 shows a treatment around a pipe or vent penetration; treatments around bulkhead penetrations are shown in Figure 635-9-7.

635-9.1.8 LADDERS AND SUPPORTS. Ladders, cable hangers, pipe hangers, and supports for lighting fixtures shall be constructed of steel to withstand the heat of an intense fire. When these are installed on aluminum ship structures treated with fire insulation, a bi-metallic support arrangement shall be used, with aluminum attachment points welded to the ship structure. Steel ladders or supports are bolted to the aluminum attachment points. Dissimilar metals shall be separated by two layers of isolating tape, MIL-I-24391. Figure 635-9-8 shows a bi-metallic support arrangement for a lighting fixture. Fire insulation shall be installed to completely cover the aluminum and steel interface.

635-9.1.9 TREATMENT OVER BALLISTIC OR FRAGMENTATION PROTECTIVE PANELS. Fire insulation is installed over some types of ballistic or fragmentation protective panels because of the potential for toxic fume release when subjected to high temperatures. Aramid fiber fragmentation protection is installed in accordance with NAVSEA drawing 803-5959219. Fire insulation shall be installed over the aramid fiber fragmentation protection in accordance with Figure 635-9-11. The restraining straps support the studs holding the fire insulation in place (Figure 635-9-10). Stud spacing shall be a maximum of 12 inches, except that studs shall be located within 3 inches of the end of a section of fire insulation to include seams. The requirement for studs within 3

inches of a seam may make it necessary to install additional retraining straps to provide support for the studs. Care shall be taken to ensure that butt joints in fire insulation do not coincide with seams between adjacent aramid fiber panels (Figure 635-9-11).

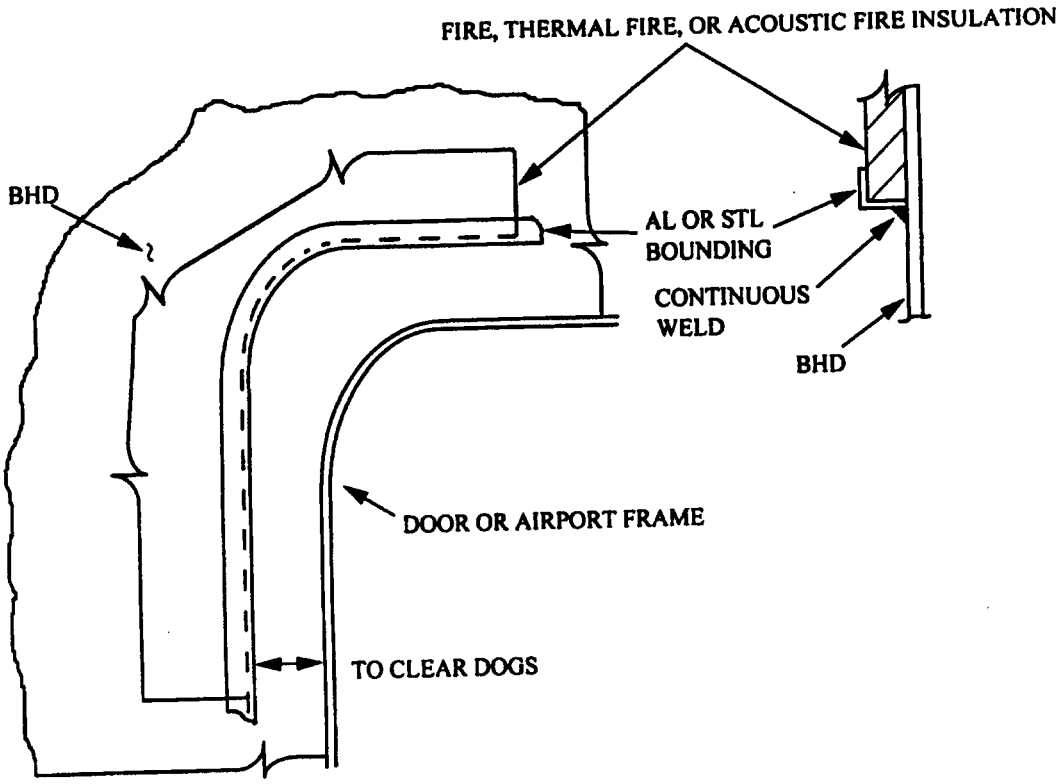

Figure 635-9-5. Treatment Around Doors and Hatches

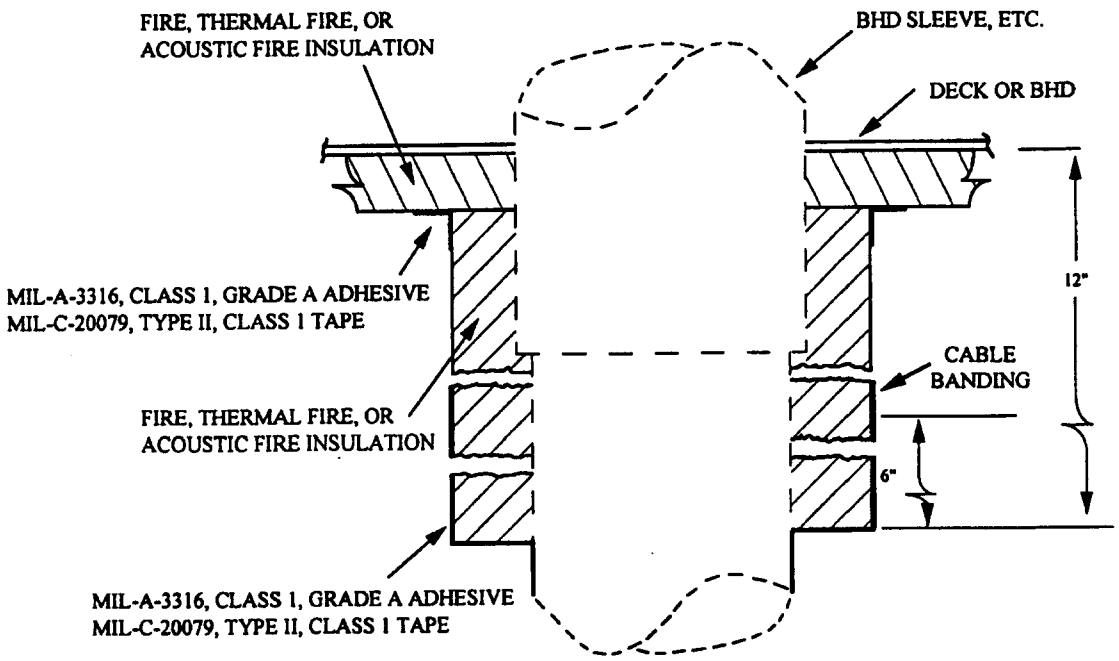

Figure 635-9-6. Fire Insulation Treatment Around Pipe or Vent Penetrations

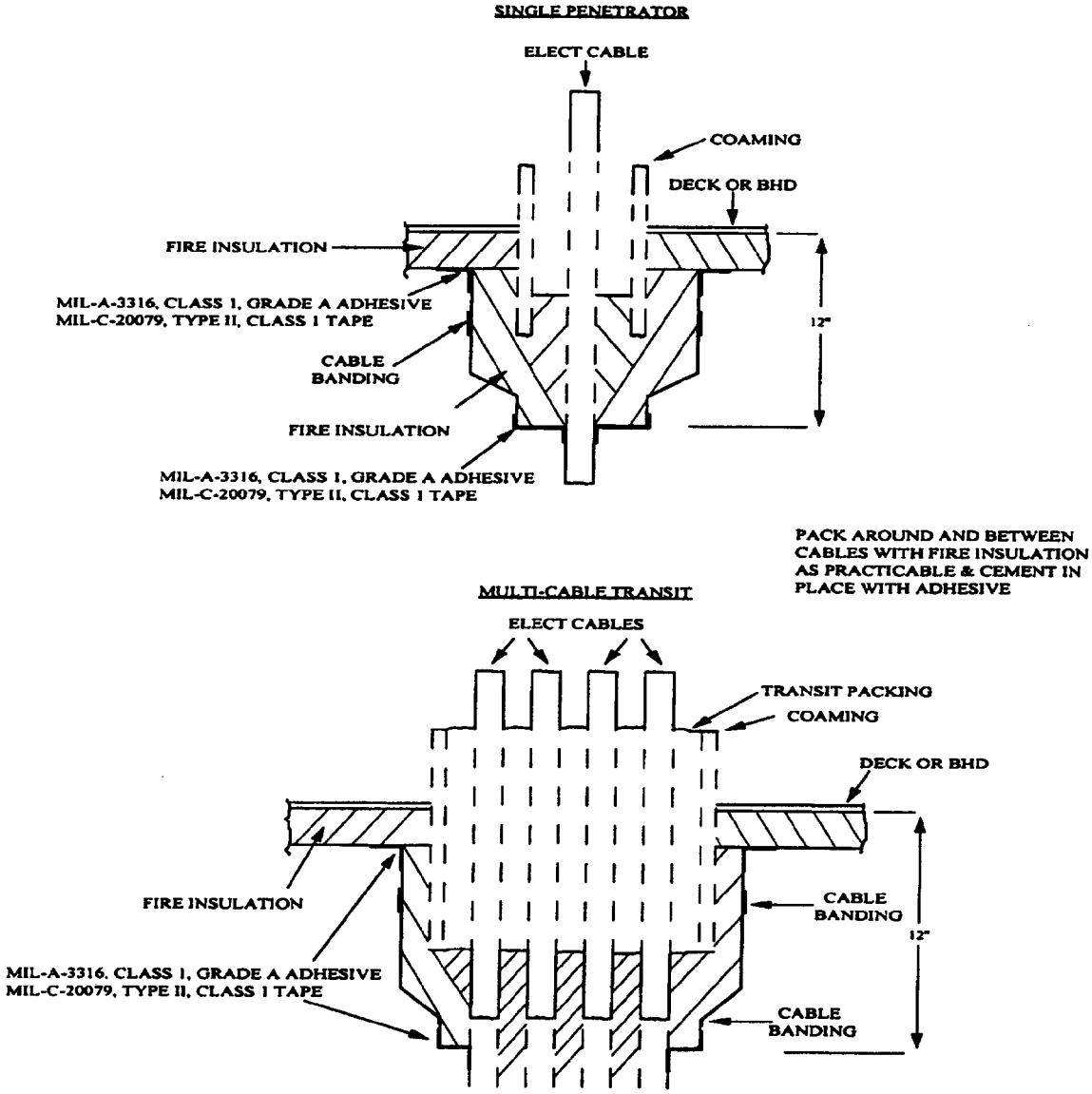

Figure 635-9-7. Fire Insulation Around Bulkhead Penetrations

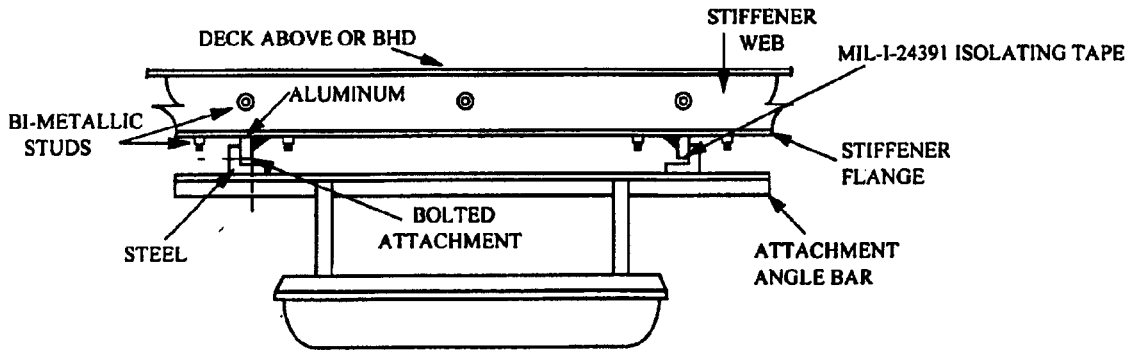

Figure 635-9-8. Light or Electrical Equipment Attachment to Stiffener (Fire Insulation Removed for Clarity)

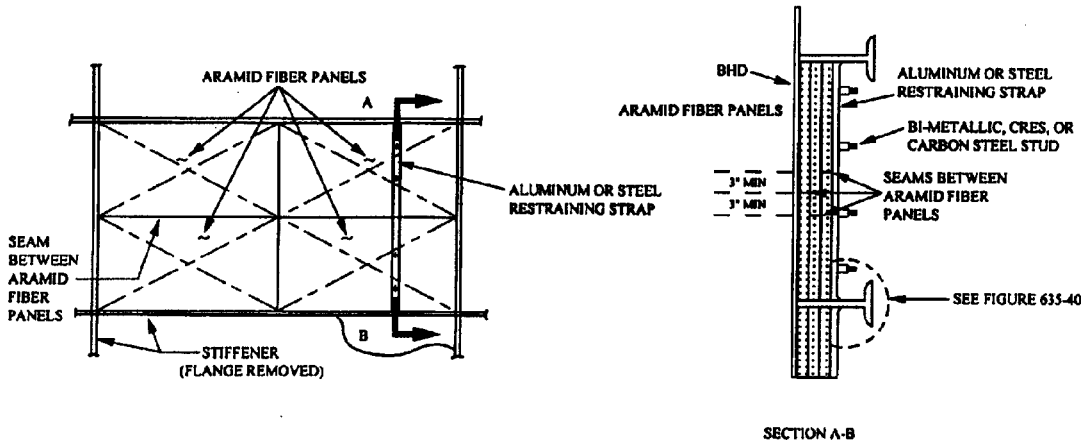

Figure 635-9-9. Multi-Layer Installation of Aramid Fiber Panels Between Stiffeners (Fire Insulation Removed for Clarity)

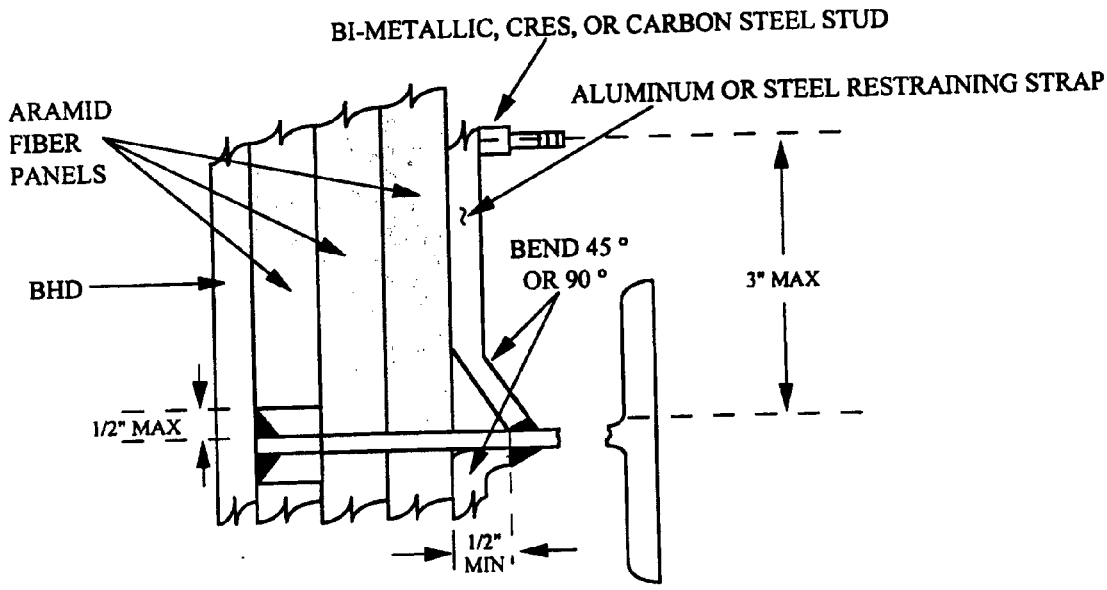

Figure 635-9-10. Installation of Restraining Strap and Fire Insulation Studs Over Layered Rigid Aramid Fiber Panels

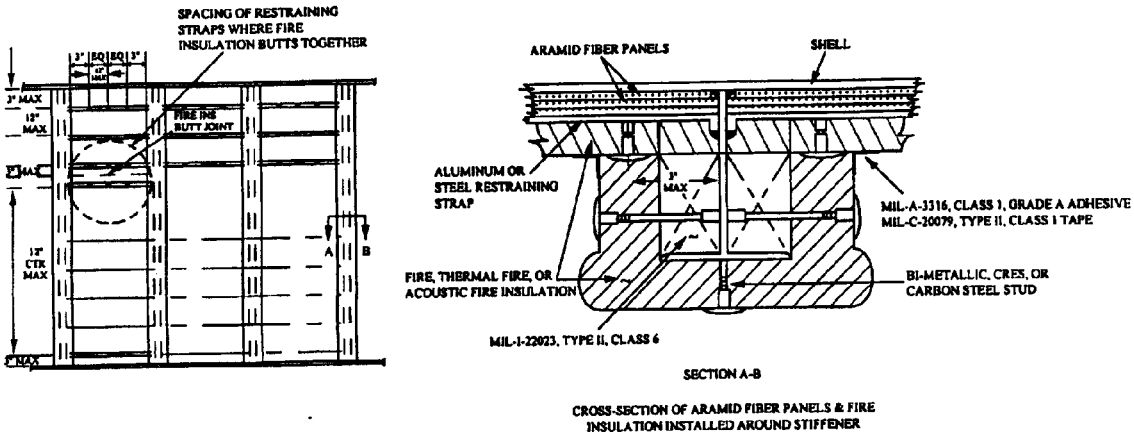

Figure 635-9-11. Typical Installtion of Aramid Fiber Panel Restraining Strap Showing Fire Insulation Stud Arrangement on Bulkhead with Vertical Stiffeners (Fire Insulation Removed for Clarity)

SECTION 10.

EMERGENCY REPAIR OF ASBESTOS-CONTAINING LAGGING

635-10.1 GENERAL

This standard operating procedure covers the emergency repair of asbestos-containing lagging. The intent of this SOP is for emergency asbestos lagging Class III work, and is not for general maintenance or normal repair of asbestos lagging which must be conducted by IMA or contractor personnel per OPNAVINST 5100.19 (series). Additional guidance concerning safety and health policy issues and requirements on asbestos for Forces Afloat is contained in chapter B1 of OPNAVINST 5100.19 (series).

635-10.1.1 PERSONAL PROTECTIVE EQUIPMENT (PPE)

a. Respiratory Protection. A full face piece, NIOSH approved, continuous flow supplied air respirator operated in pressure-demand mode shall be used. Additional respiratory protection is contained in OPNAVINST 5100.19 (series).

NOTE

All personnel wearing respiratory protective equipment shall be trained, fit tested within six months of the time of use, and medically cleared before donning a respirator.

b. Gloves. Wear disposable gloves for this action. Surgical gloves are prohibited as an outer glove. Surgical or patient exam-type latex gloves may be worn as an inner glove during removal operations.

c. Disposable Sacksuits. Wear Tyvek disposable sacksuits with integral booties and hood.

d. Boots. Wear rubber slip-resistant booties over the Tyvek booties.

e. Tape. Duct tape shall be applied to wrists, ankles, and around the respirator and hood opening. While other tapes may work, duct tape is recommended due to its superior adhesive properties.

635-10.2 PROCEDURES

1. Obtain the Commanding Officer's permission to remove asbestos for emergency repair.
2. Asbestos handling and removal competent person shall brief the asbestos emergency response team.
3. Secure or redirect ventilation as necessary.
4. Cordon off the area around the asbestos lagging to be removed using rope or tape and appropriate signs.
5. Suit up team in required PPE ensuring that all openings are taped shut.

NOTE

Do not consume food or beverages, chew gum or tobacco, smoke, or apply cosmetics during asbestos emergency repairs.

6. Use an impermeable drop cloth (polyethylene) below the work area.
7. Glove bag procedure
   a Place any tools, encapsulant, etc. into glove bag before beginning securing operations.
   b Attach glove bag to area being worked. Be sure to securely close all seams on and around the glove bag with duct tape.
   c The glove bag should be tested for leaks using smoke tubes. Smoke tubes used in respiratory fit test procedures are ideal for this function. If leaks are found, secure with additional duct tape.
   d Ensure HEPA vacuum and amended water sprayer are attached to appropriate points on the glove bag and taped to prevent leaks. It is recommended that negative pressure glove bags be utilized to ensure personnel protection during work if the glove bag is inadvertently cut. As a minimum, negative pressure shall be used upon the completion of the job, and when the glove bag is being removed from the repair site.
8. Thoroughly wet the lagging with the amended water prior to and during the removal operation.

9. Remove the lagging as intact as possible.
10. Clean bare pipe and seal off exposed insulation using approved encapsulation methods.
11. Wash and wipe down inside of glove bag from top to bottom to remove potential fiber contamination.
12. Remove any recoverable tools by holding onto them and pulling them out. The glove should now be inside out. Twist the glove and seal with duct tape. Cut glove from glove bag with scissors or sharp knife, and hold for later decontamination.
13. Turn on HEPA vacuum and twist glove bag in the middle below the vacuum hose. Seal with duct tape and disconnect glove bag from around work area and place entire bag into a red colored asbestos waste disposal bag.
14. Replace all asbestos-containing lagging with non-asbestos containing lagging.
15. HEPA vacuum and/or wet and wipe any dusty or potentially contaminated surfaces with a damp rag. Dispose of rags as asbestos waste.
16. Clean and decontaminate all tools with damp rags. Dispose of rags as asbestos waste.
17. Pick up drop cloth and dispose of as asbestos waste.
18. Remove rubber booties and decontaminate with wet rags. Dispose of rags as asbestos waste.
19. Remove the Tyvek suit and dispose of as asbestos waste. It is recommended that the arms be turned inside out, then roll the suit down the body, and pull the legs inside out. This keeps contamination on the suit and away from the body.
20. Remove gloves by turning them inside out and dispose of as asbestos waste.
21. Remove respirator and decontaminate using warm soapy water.
22. Personnel shall shower upon completion of asbestos removal action and before eating and drinking, chewing gum or applying cosmetics.

635-10.2.1 DISPOSAL. Dispose of glove bag, PPE and any scrap materials as asbestos waste. Dispose of all rags as asbestos waste. Dispose of drop cloths as asbestos waste. Once asbestos waste is collected, place in red asbestos labeled lag and adequately wet all wastes while minimizing any standing water in the disposal bags. Tape off the asbestos waste bag and place in a second red asbestos bag (double bag). Seal up the second bag with tape and place in asbestos waste barrel/container for offload. Seal all bags with a ″J″ or goose neck seal.

635-10.2.2 MEDICAL SURVEILLANCE. Medical surveillance is required for the asbestos emergency response team.

635-10.2.3 TRAINING. Personnel designated to be on the asbestos emergency response team shall be trained through the two day shipboard Asbestos Emergency Response course (A-760-2166) offered through the Naval Occupational Safety and Health, and Environmental Training Center (NAVOSHENVTRACEN).

635-10.2.4 CONFLICTS. Application of asbestos-control requirements shall not be allowed to compromise the requirements for control of radioactive contamination in naval nuclear-powered ships as contained in NAVSEA S9213-33-MMA-000/(v), **Radiological Controls for Ships** . Should conflicts be discovered, submit a proposed resolution to COMNAVSEA (SEA 08).

APPENDIX A.

NON-ASBESTOS NATIONAL STOCK NUMBERS AND RELATED ITEM DESCRIPTIONS FOR SELECTED THERMAL INSULATION SPECIFICATIONS

635-A.1 NATIONAL STOCK NUMBERS (NSN'S)

1. The National Stock Numbers contained in this appendix are representative of items in the Navy supply only. Items for which there is insufficient demand [for example, MIL-I-742, Type II, (unfaced)] are not included in this listing, and are currently not carried within the Navy Supply System.
2. Stock numbers for insulation materials are determined by entering the appropriate Table A-1 through Table A-16, which are arranged according to application, as follows:

Table	Application
635-A-1 thru 635-A-3	Pipe Insulation
635-A-4 thru 635-A-10	Boards, Blankets, Blocks, and Felts
635-A-11 thru 635-A-14	Lagging
635-A-15	Insulation Adhesive
635-A-16	Insulation Cement

Within each table, materials are further identified by specification, composition, density, temperature range, thickness, length and width. A national stock number and a Federal supply code for manufacturers are given for each item which is carried within the Navy supply system.

3. Users desiring to have NSN's assigned to additional items and included in this document may do so by forwarding the required information in letter form. Specific ordering data, specification reference number and anticipated stock demands should be forwarded to:

   Commander, Naval Sea Systems CommandDepartment of the Navy2531 Jefferson Davis HighwayArlington, VA, 22242-5160Attention: Code 03M3

635-A.2 REFERENCE DOCUMENTS

1. Stock numbers are provided for the following Federal and Military Specifications listed in chronological order and separated according to application:

Specification	Title
DOD-I-24688	Insulation Panel, Thermal and Acoustic Absorptive, Open-Cell Polyimide Foam
HH-P-31	Packing and Lagging Material, Fibrous Glass, Metallic and Plain Cloth and Tape
MIL-I-742	Insulation Board, Thermal, Fibrous Glass
MIL-I-2781	Insulation, Pipe, Thermal
MIL-I-2818	Insulation Blanket, Thermal, Fibrous Material
MIL-I-2819	Insulation, Block, Thermal
MIL-C-2861	Cement Insulation, High Temperature
MIL-3316	Adhesives, Fire Resistant, Thermal Insulation
MIL-I-16411	Insulation Felt, Thermal, Glass Fiber
MIL-C-20079	Cloth, Glass, Tape, Textile, Glass and Thread, Glass
MIL-I-22023	Insulation Felt, Thermal and Sound Absorbing Felt, Fibrous Glass, Flexible

Specification	Title
MIL-C-22344	Insulation, Pipe, Thermal, Fibrous Glass

2. In addition, stock numbers are provided for materials contained in NAVSEA drawing No. 2145518-803, ″Spray Shields for Mechanical Joints.″

635-A.3 APPLICATION: PIPE INSULATION

Table 635-A-1 MIL-I-2781 INSULATION, PIPE, THERMAL (CALCIUM SILICATE) NOMINAL DENSITY (APPROXIMATELY 14 LBS/FT^3) NOMINAL LENGTH-36 INCHES SINGLE LAYER

Nominal Pipe Size IPS (inches)	Temperature Range °F	Nominal Thickness (inches)	Insulation Inside Diameter*** (inches)	National Stock Number
1/2	389-750	2-1/2	.86	5640-00-551-3480
1/2	951-1200	4	.86	5640-00-163-8028
3/4	389-750	2-1/2	1.07	5640-00-279-7716
3/4	951-1200	4	1.07	5640-00-163-8029
1	389-750	2-1/2	1.33	5640-00-269-5982
1	951-1200	4	1.33	*5640-00-163-8030
1-1/4	389-750	2-1/2	1.68	5640-00-207-8241
1-1/4	951-1200	4	1.68	5640-00-163-8033
1-1/2	125-388	1-1/2	1.92	5640-01-042-0966
1-1/2	389-750	2-1/2	1.92	5640-00-201-2602
1-1/2	951-1200	4	1.92	5640-00-163-8034
2	389-900	3	2.41	5640-00-201-2615
2	951-1200	4	2.41	5640-00-163-8036
2-1/2	125-338	1-1/2	2.91	5640-00-551-5013
2-1/2	389-900	3	2.91	5640-00-201-2587
2-1/2	901-1200	4	2.91	5640-00-163-8037
3	125-338	1-1/2	3.53	5640-00-551-3539
3	389-500	3	3.53	5640-00-132-9826
3	501-750	3-1/2	3.53	5640-00-201-2595
3	951-1200	4-1/2	3.53	5640-00-163-8035
3-1/2	501-750	3-1/2	4.03	5640-00-201-2596
3-1/2	951-1200	4-1/2	4.03	5640-00-163-8038
4	389-500	3	4.53	5640-00-132-9750
4	501-750	3-1/2	4.53	5640-00-201-2583
4	951-1200	4-1/2	4.53	5640-00-163-8039
4-1/2	501-900	4-1/2	5.03	**5640-01-043-4972
5	389-750	3-1/2	5.64	5640-00-201-2611
5	951-1200	5-1/2	5.64	5640-00-163-8041
6	389-750	3-1/2	6.70	5640-00-551-3476
6	951-1200	5-1/2	6.70	5640-00-201-2623
7	501-750	4	7.70	*5640-00-166-8652
8	600	2-1/2	8.70	**5640-00-542-2073
8	501-750	4	8.70	5640-00-166-8668
8	951-1200	6	8.70	5640-00-166-8244
9	951-1200	6	9.70	5640-00-166-8334

Table 635-A-1 MIL-I-2781 INSULATION, PIPE, THERMAL (CALCIUM SILICATE) NOMINAL DENSITY (APPROXIMATELY 14 LBS/FT^3) NOMINAL LENGTH-36 INCHES SINGLE LAYER - Continued

Nominal Pipe Size IPS (inches)	Temperature Range °F	Nominal Thickness (inches)	Insulation Inside Diameter*** (inches)	National Stock Number
10	389-500	3-1/2	10.83	*5640-00-551-3534
10	501-750	4	10.83	5640-00-166-8680
10	951-1200	6	10.83	5640-00-166-8321
11	501-750	4	11.83	**5640-00-166-8745
12	501-750	4	12.84	5640-00-166-8774
12	951-1200	6	12.84	5640-00-166-8325
14	501-750	4	14.09	5640-00-166-8785
*Double layer**Navy interest is not recorded***Inside diameter is listed in accordance with ASTM C 585.				

Table 635-A-2 MIL-I-22344 INSULATION, PIPE, THERMAL, FIBROUS GLASS NOMINAL LENGTH-36 INCHES TEMPERATURE LIMIT-370°F MAXIMUM

Nominal Pipe Size IPS (inches)	Nominal Thickness (inches)	Nominal Density (lbs/ft^3)	National Stock Number
1/8	1/2	6-1/2	5640-00-841-5220
3/8	1/2	6-1/2	5640-00-841-5222
1/2	1	6-1/2	5640-00-841-5221
3/4	1/2	6-1/2	5640-00-841-5216
1-1/2	1	6-1/2	5640-00-841-5217
2	1.094	6-1/2	5640-00-841-5218
2	1	6-1/2	5640-00-841-5219

Table 635-A-3 DOD-I-24688, TYPE I, POLYIMIDE PIPE INSULATION NOMINAL LENGTH-48 INCHES

Nominal Pipe Size IPS (inches)	Thickness (inches)	Insulation Inside Diameter (inches)	National Stock Number
1	1	1.315	5640-01-390-9683
1-1/4	1	1.66	5640-01-390-9686
2	1/2	2.375	5640-01-390-9684
2	1	2.375	5640-01-390-9687
2-1/2	1	2.875	5640-01-390-9685
3	1	3.5	5640-01-390-9689
3-1/2	3/4	4.0	5640-01-390-9690
4	1	4.5	5640-01-390-9688
5	1	5.563	5640-01-390-9691

635-A.4 APPLICATION: BOARDS, BLANKETS, BLOCKS, AND FELTS

Table 635-A-4 MIL-I2818, INSULATION BLANKET, THERMAL, FIBROUS MATERIAL (MINERAL WOOL) NOMINAL WIDTH-24 INCHES DENSITY - APPROXIMATELY 12 LBS/FT^3

Nominal Thickness (inches)	Nominal Length (inches)	National Stock Number
1	36	5640-00-245-2478
2	36	5640-00-245-2482
3-1/2	48	5640-00-245-2488

Table 635-A-5 MIL-I-2819 INSULATION BLOCK, THERMAL (CALCIUM SILICATE) NOMINAL LENGTH-36 INCHES DENSITY: CLASS 2-APPROXIMATELY 14 LBS/FT^3 CLASS 3-APPROXIMATELY 22 LBS/FT^3

Nominal Thickness (inches)	Nominal Width (inches)	Class	National Stock Number
1 (SCORED)	12	3	5640-00-267-1586
1 (NOT SCORED)	12	3	5640-00-267-1587
1-1/2 (SCORED)	12	2	5640-01-162-5595
2 (SCORED)	12	3	5640-00-267-1590
2-1/2 (NOT SCORED)	6	2	5640-00-267-1584
2-1/2 (SCORED)	12	3	5640-00-267-1591
3 (NOT SCORED)	6	3	5640-00-267-1592
1-1/2 (SCORED)	12	3	5640-00-267-1589

NOTE

Class 2 material is heat resistant to 1200°F. Refer to either MIL-STD-769 or **NSTM Chapter 635** for total thickness of insulation required. Class 3 material is heat resistant to 1500°F. This insulation is used with boiler brickwork. Insulation thickness selected shall be in accordance with standard refractory drawings for each ship class.

Table 635-A-6 MIL-I-16411 INSULATION, FELT, THERMAL, GLASS FIBER TEMPERATURE LIMIT-1200°F MAXIMUM

Nominal Thickness (inches)	Nominal Length (inches)	Nominal Width (inches)	Nominal Weight (oz/ft^2)	Unit of Issue (roll)	National Stock Number
1/2	900	60	7.5	25 yd	5640-00-786-2229
3/4	600	60	10	50 ft	5640-00-173-6605
3/4	300	60	9	25 ft	5640-00-281-8627
1	540	60	15	45 ft	5640-00-173-6591
1	600	13	15	50 ft	5640-00-173-6595
1	600	7	15	50 ft	5640-00-173-6603

Table 635-A-7 MIL-I-22023 INSULATION, FELT, THERMAL AND SOUND ABSORBING FELT, FIBROUS GLASS, FLEXIBLE

Nominal Thickness (inches)	Nominal Length (inches)	Nominal Width (inches)	Nominal Density (lb/ft^3)	Type/Class	National Stock Number
3/4	600-2400	46	3/4	I, 2	5640-00-267-1639
1/2	2400	72	1-1/2	I, 4	5640-00-281-8632
3/4	2400	72	1-1/2	I, 4	5640-00-281-8633
1	1200	72	1-1/2	I, 4	5640-00-281-8634
2	600	72	3/4	II, 2	5640-00-542-3449
2	1200	24	3/4	I, 2	5640-00-990-7743
1	Any	72	3/4	II, 2	*5640-00-542-3395
* Navy interest is not recorded.					

Table 635-A-8 MIL-I-742 INSULATION BOARD, THRMAL, FIBROUS GLASS (TYPE I)

Nominal Thickness (inches)	Nominal Length (inches)	Nominal Width (inches)	Nominal Density (lb/ft^3)	National Stock Number
3/4	36	24	5.30	5640-00-809-6325
1	36	24	4.65	5640-00-809-6312
2	36	24	3.68	5640-00-809-6315

Table 635-A-9 DOD-I-24688, TYPE II, CLASS 1, POLYIMIDE FOAM, THERMAL INSULATION PANEL WITH FIBROUS GLASS CLOTH FACING

Panel Size (feet)	Nominal Thickness (inches)	National Stock Number
2 x 3	1	5640-01-371-3263
2 x 3	2	5640-01-371-3262
2 x 4	1/2	5640-01-371-3267
2 x 4	1	5640-01-371-3266
2 x 4	2	5640-01-371-3265

Table 635-A-10 DOD-I-24688, TYPE II, CLASS 2, POLYIMIDE FOAM, ACOUSTIC INSULATION PANEL, SLOTTED BASE BOARD, FACED WITH PERFORATED FIBROUS GLASS CLOTH

Panel Size (feet)	Nominal Thickness (inches)	National Stock Number
2 x 3	2	5640-01-371-5238
2 x 4	2	5640-01-371-5239

635-A.5 APPLICATION: LAGGING

Table 635-A-11 HH-P-31 PACKING AND LAGGING MATERIAL, FIBROUS GLASS, METALLIC AND PLAIN CLOTH AND TAPE (TYPE I, CLASS 1)

Nominal Thickness (inches)	Nominal Length (inches)	Nominal Width (inches)	National Stock Number
0.041	50	48	5330-01-171-4026
0.041	50	60	5330-01-171-4027

Table 635-A-12 MIL-C-20079 CLOTH, GLASS, TAPE, TEXTILE, GLASS AND THREAD GLASS (TYPE I - GLASS CLOTH) NOMINAL LENGTH-50 YARDS NOMINAL WIDTH-60 INCHES

Weight (oz/yd^2)	Class	National Stock Number
11.9-14.6	2	8305-00-267-1574
8.5	3	8305-00-148-7363
8.5	5	8305-01-082-3030
12.8	7	8305-01-058-4321
14.5	6	8305-01-058-4320
17.7	9	8305-00-148-7364

Table 635-A-13 MIL-C-20079 CLOTH, GLASS, TAPE, TEXTILE, GLASS AND THREAD, GLASS (TYPE II-GLASS TAPE)

Weight (oz. per linear yard)	Nominal Thickness (inches)	Nominal Width (inches)	Class	National Stock Number
.32	0.007	2.0	1	8315-00-267-1632
.40	0.007	2.0	2	8315-00-267-1628
.48	0.007	3.0	1	8315-00-267-1633
.60	0.007	3.0	2	8315-00-267-1629
.80	0.007	4.0	2	8315-00-267-1630
.97	0.125	0.5	4	8315-01-100-9062
1.46	0.125	0.75	4	8315-01-100-9063
1.94	0.125	1.0	4	8315-01-100-9064
2.43	0.125	1.25	4	8315-01-100-9065
2.92	0.125	1.50	4	8315-01-100-9066
3.89	0.125	2.00	4	8315-01-100-9067
4.86	0.125	2.50	4	8315-01-100-9068
5.83	0.125	3.00	4	8315-01-100-9069
7.78	0.125	4.00	4	8315-01-100-9070
9.72	0.125	5.00	4	8315-01-100-9071
11.66	0.125	6.00	4	8315-01-100-9072
1.20	0.007	6.00	2	*8315-00-267-1631
* Navy interest is not recorded.				

ASTM F 1138 SPRAY SHIELDS FOR MECHANICAL JOINTS SILICONE ALUMINIZED CLOTH

Part Numbers	Width (inches)	Length (inches)	Nominal Distance 1* (inches)	Nominal Distance 2* (inches)	Nominal Distance 3* (inches)	Nominal Distance 4* (inches)	National Stock Number
803-2145518-5	5	360	0.625	0.375	3.000	0.750	4730-01-010-0997
803-2145518-6	6	360	0.625	0.375	3.000	0.750	4730-01-010-0998
803-2145518-7	7	360	0.625	0.375	3.000	0.750	4730-01-010-0999
803-2145518-8	8	360	0.625	0.375	3.000	0.750	4730-01-010-1000
803-2145518-9	9	240	0.625	0.375	3.000	0.750	4730-01-010-6123
803-2145518-10	10	240	0.625	0.375	3.000	0.750	4730-01-010-1001
803-2145518-11	11	240	0.625	0.375	3.000	0.750	4730-01-010-1002
803-2145518-12	12	240	0.625	0.375	3.000	0.750	4730-01-010-1003
4730-00-085-1715* Nominal Distance 1 = Distance from hook center to nearest outside edge along length. Nominal Distance 2 = Distance from sewn seam to neares toutside edge along length. Nominal Distance 3 = Center to center distance between hooks. Nominal Distance 4 = Distance from hook center to nearest outside edge along width.							

635-A.6 APPLICATION: INSULATION ADHESIVE

Table 635-A-15 MIL-A-3316 ADHESIVES, FIRE RESISTANT THERMAL INSULATION

Class/Grade	Units of Issue	National Stock Number
1, A	5 gallon pail	8040-00-273-8707
1, A	1 gallon can	8040-00-273-8708
2, A	1 gallon can	8040-00-273-8710

635-A.7 APPLICATION: INSULATION CEMENT

Table 635-A-16 MIL-C-2861 CEMENT, INSULATION, HIGH TEMPERATURE DENSITY-APPROXIMATELY 30 LB/FT^3

Units of Issue	National Stock Number
50 lb bag	5640-00-272-2995

REAR SECTION

NOTE

TECHNICAL MANUAL DEFICIENCY/EVALUATION EVALUATION REPORT (TMDER) Forms can be found at the bottom of the CD list of books. Click on the TMDER form to display the form.